Universal Stopper Install
STI-13000 & STI-14000 Series

Rely on STI®

Installation Notes

- When used outdoors, the manual station must also be rated for outdoor use.
- UL Listing does not permit external power source or connection of horn relay contacts to fire alarm or life safety devices.
- When properly installed, the operation of this cover will not interfere with the function of your life safety system.
- Horn operation and performance must be tested annually. Battery replacement is recommended annually dependent on usage and battery expiration date.
- Ensure the service pin is properly inserted in the service pin receptor to silence horn while performing installation or servicing horn.
- If mounting to an uneven surface, a backplate (STI-1314) is recommended to help ensure proper sealing to mounting surface.
- The backplate may be drilled if wire access or screw mounting holes are needed.

Specifications

Polycarbonate Enclosure

- Flammability - flush and surface mount models (Fig. 2, 3 & 4): UL 94 V-2, enclosed flush and enclosed back box models (Fig. 5 & 6): UL 94 5VA
- Cover wall thickness 0.125 inches

Horn (battery included)

	current draw			dBA @ 9VDC		
STI-13*20 & STI-13*30 models	9vdc	12vdc	24vdc	1 ft.	3 ft.	10 ft.
Low volume	36 mA	42 mA	22 mA	98	87	75
High volume	155 mA	146 mA	95 mA	108	93	82
Standby current	0.03 mA	0.64 mA	1.9 mA	-	-	-

	current draw			dBA @ 3VDC		
STI-14*20 & STI-14*30 models	3vdc	12vdc	24vdc	1 ft.	3 ft.	10 ft.
Low volume	60 mA	46 mA	25 mA	84	74	62
High volume	140 mA	87 mA	45 mA	95	85	76
Standby current	0.04 mA	0.10 mA	0.014 mA	-	-	-

Dry Contact Relay

- 30 VAC/VDC, 1A

Temperature Range

- Electronics operating range: -40° to 120°F (-40° to 49°C) **Below -4°F (-20°C), a remote power source is recommended**
- Polycarbonate rated: -40° to 284°F (-40° to 140°C)

Approvals

It has been tested and approved or listed by:

- UL, CUL Listed - S2466
- UL Certified to meet ADA
- NEMA Type 3RX models with enclosed flush mount and enclosed back box options

Polycarbonate Cleaning Instructions

Rinse with water to remove abrasive dust and dirt. Wash with soap or mild detergent, using a soft cloth. Rinse once more then dry with a soft cloth or chamois. Exercise caution when using water inside enclosure. Make sure unit is completely dry inside before reassembling. To remove grease or wet paint from exterior of cover, rub gently with a soft cloth thoroughly wetted with Naptha. Then wash and rinse. Do not use razor blades.

See website for accessories

Fig. 1 - Dimensions

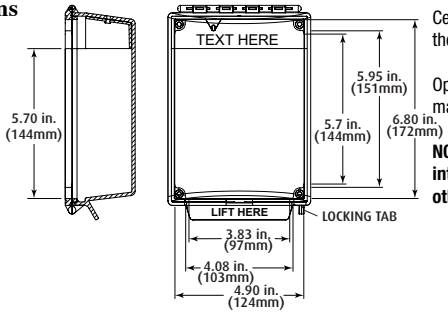

Center pull station to the Universal Stopper with the help of dimensions shown in Fig. 1.

Open cover, use frame or optional backplate to mark mounting holes.

NOTE: Be sure the entire cover travel will not interfere with operation of the pull station or other safety system equipment when installed.

Fig. 2 - Flush Mounting Option - Models 130** & 140**

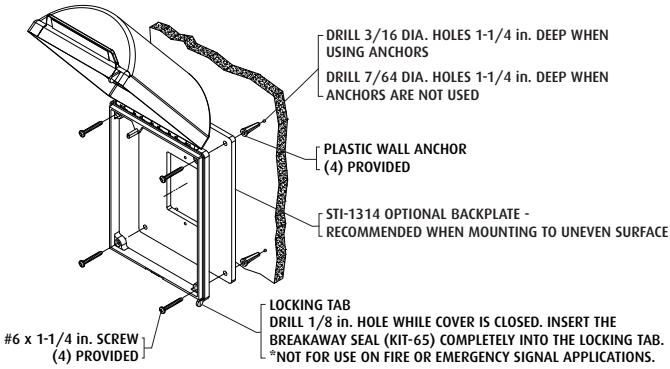

Fig. 3 - Flush Mount with add-on Spacer - Models 131** & 141**

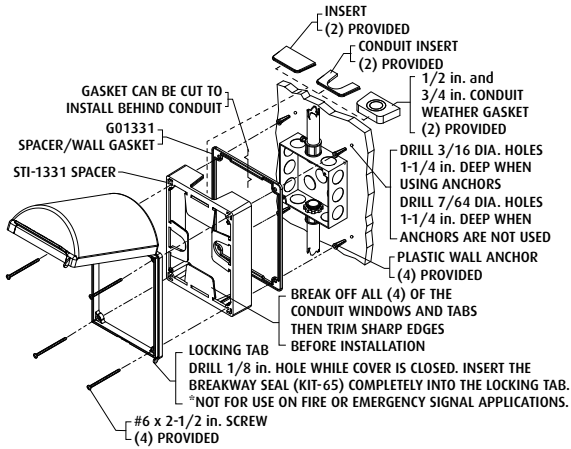

Fig. 4 - Surface Mounting Option - Models 132** & 142**

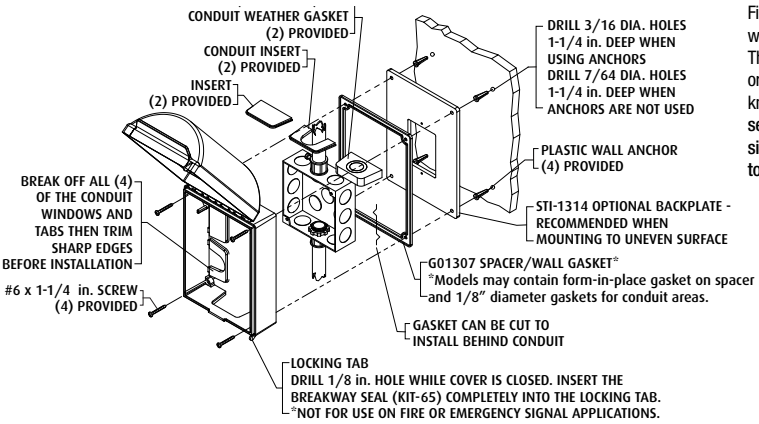

Fit appropriate conduit weather gasket to conduit. Then fit gasket to insert or directly to the housing knock-out. **For additional seal reliability a bead of silicone may be applied to conduit fitting.**

Fig. 5 - Enclosed Flush Mounting Option - Models 133** & 143** NEMA TYPE 3RX

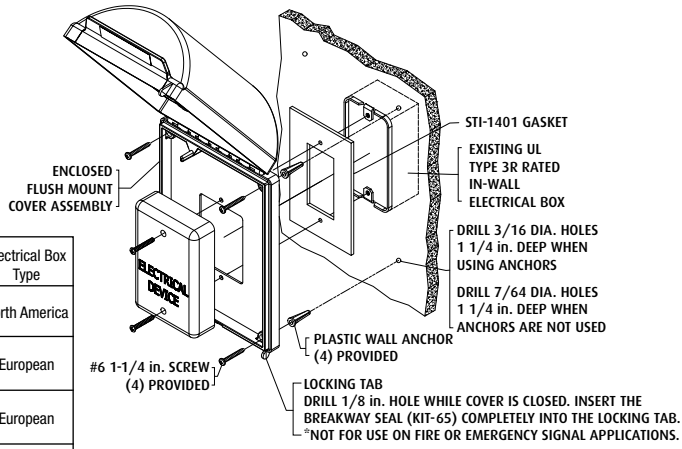

Models		Back Box Conduit Thread	Electrical Box Type
STI-134**	STI-144**	3/4 NPT	North America
STI-135**	STI-145**		
STI-136**	STI-146**	20mm	European
STI-137**	STI-147**		
STI-138**	STI-148**	3/4 NPT	European
STI-139**	STI-149**		
STI-13A**	STI-14A**	20mm	North America
STI-13B**	STI-14B**		

Fig. 6 - Enclosed Back Box Mounting Option - Models 134**, 135**, 138**, 139**, 144**, 145**, 148** & 149** NEMA TYPE 3RX

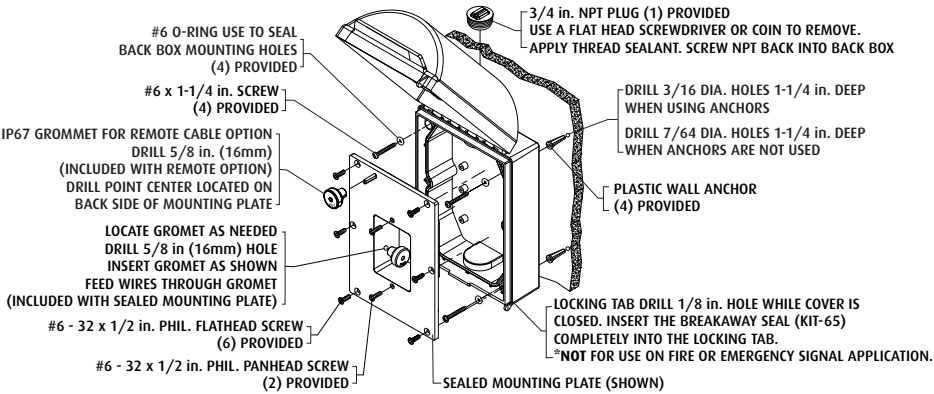

Fig. 7 - Horn Option Models STI-13x20 & STI-13x30 - Wiring Details - Remote Power/Relay Options

*9V battery acts as a backup power when using remote power

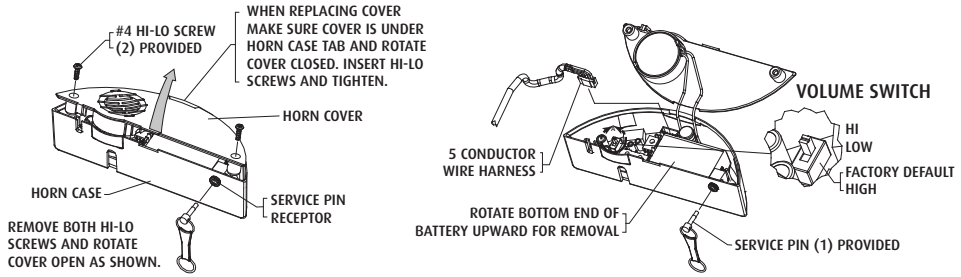

Wire	Description
Red	12VDC - 24VDC
Black	12VDC - 24VDC
Blue	Common
Green	NC - Norm Closed
Yellow	NO - Norm Open

Horn Activation

Remove service pin and horn should sound. Close covers and horn should silence. When performing annual battery test/replacement or when servicing alarm system, insert service pin to prevent horn from sounding. Remember to remove to return to normal operation.

Fig. 8 - Horn Option Models STI-14x20 & STI-14x30 - Wiring Details - Remove Power/Relay Options

*9V battery acts as a backup power when using remote power

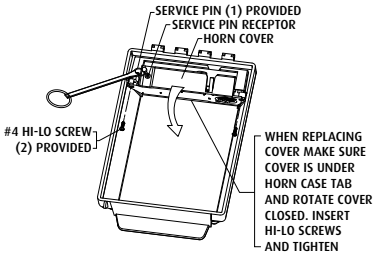

TO REPLACE BATTERY REMOVE BOTH HI-LO SCREWS AND ROTATE COVER OPEN AS SHOWN

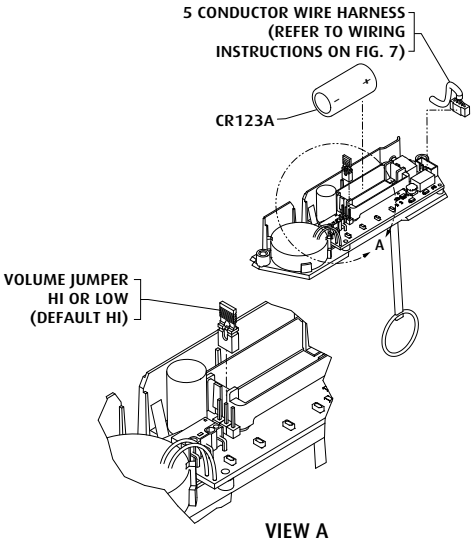

VIEW A

See FIG. 7 for wire description and activation instructions.

Warranty

Three year guarantee against breakage of polycarbonate in normal use (one year on electro mechanical and electronic components). Electronic warranty form at **www.sti-usa.com/wc14**.

⚠ WARNING: This product can expose you to chemicals including Dichloromethane, which is known to the State of California to cause cancer, and Bisphenol A (BPA), which is known to the State of California to cause birth defects or other reproductive harm. For more information go to **www.P65Warnings.ca.gov**.

Important Notice (when used on fire systems)
The Universal Stopper is intended to be used in areas where the incidence of false fire alarms from manual pull stations is high or has proven to be a serious problem. Any disadvantage of this device is more than balanced when one considers the consequences of false fire alarms, especially if fire service personnel and equipment are responding to a false fire alarm when they are needed for a real fire somewhere else. Add to this, the disruption to the facility when false alarms occur. If you have, or may have, a problem with false fire alarms or physical/weather damage to your fire alarm activation devices, the Universal Stopper could prove invaluable.

Avis important (en cas d'utilisation sur les réseaux d'incendie)
Le Universal Stopper est destiné à être utilisé dans les zones où l'occurrence de fausses alertes d'incendie issues d'avertisseurs d'incendie manuels est élevée ou présente un problème grave. Un quelconque inconvénient de ce dispositif est vite contrecarré par les conséquences des fausses alertes d'incendie, surtout lorsque le personnel et l'équipement des services d'incendie réagissent à une fausse alerte d'incendie alors que leur intervention ailleurs sur un vrai incendie s'avère nécessaire en même temps.À cela s'ajoute l'agitation éprouvée dans l'établissement au moment du déclenchement d'une fausse alerte. Si vous rencontrez, ou risquez de rencontrer, un problème avec les fausses alertes d'incendie ou avec l'éventuel endommagement par effet climatique ou physique de vos dispositifs de déclenchement des alertes d'incendie, le Universal Stopper pourra alors se révéler d'une valeur inestimable.

Safety Technology International

2306 Airport Rd • Waterford, MI 48327, USA
Phone: 248-673-9898 • Fax: 248-673-1246
info@sti-usa.com • www.sti-usa.com

Taylor House • 34 Sherwood Road • Bromsgrove
Worcestershire • B60 3DR • England • Tel: +44 (0)1527 520 999
Fax: +44 (0)1527 501 999 • info@sti-emea.com • www.sti-emea.com

Subject to change without notice.
Printed in USA

Univ Stopper IS
Feb2019