Hanwha Vision

Network PTZ

XNP-6550RH

2M H.265 55x IR PTZ Camera

Key Features

- Max. 2Megapixel (1920 x 1080) resolution
- 4.75 ~ 261.4mm (Optical 55x) lens
- Day & Night (ICR), WDR (120dB)
- DIS with built-in gyro sensor
- Max. IR viewable length : 500m
- H.265, H.264, MJPEG codec support
- Multiple streaming, WiseStream II support
- Intelligent Video / Audio Analytics, Defog (Optical)
- microSD/SDHC/SDXC memory 2 slots (Up to 512 GB)
- IP66, IK10

Compatible Accessories (Optional)

SBP-300B

SBP-300CM

SBP-300KM

SBP-300LM

SBP-300NB

SBP-300PM

SBP-300WM

SBP-300WM1

SBP-303HF

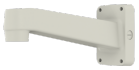

SBP-390WM2

Design and specifications are subject to change without notice. The latest product information / specification can be found at HanwhaVision.com.
Hanwha Vision is formerly known as Hanwha Techwin.

© Hanwha Vision CO., LTD. All rights reserved.

XNP-6550RH

2M H.265 55x IR PTZ Camera

Specifications

Video	
Imaging Device	1/2.8" 2MP CMOS
Resolution	1920x1080, 1280x1024, 1280x960, 1280x720, 1024x768, 800x600, 800x448, 720x576, 720x480, 640x480, 640x360, 320x240
Max. Framerate	H.265/H.264: Max. 60fps/50fps(60Hz/50Hz) MJPEG: Max. 30fps/25fps(60Hz/50Hz)
Min. Illumination	Color: 0.02Lux(F1.6, 1/30sec) BW: 0.002 lux (1/30sec,F1.6), 0Lux(IR LED On)
Video Out	CVBS: 1.0 Vp-p / 75Ω composite, 720x480(N), 720x576(P) for installation

Lens	
Focal Length (Zoom Ratio)	4.75~261.4mm(55x) zoom
Optical Zoom	55x
Max. Aperture Ratio	F1.6 (Wide) ~ F6.5 (Tele)
Angular Field of View	H: 58.6-(Wide)~1.23-(Tele) / V: 34.8-(Wide)~0.71-(Tele)
Min. Object Distance	5m
Focus Control	AF / One-Shot AF / Manual
Lens Type	DC auto iris

Pan / Tilt / Rotate	
Pan Range	360° Endless
Pan Speed	Preset: 400°/sec, Manual: 0.024°/sec~250°/sec
Tilt Range	95°(-5°~90°)
Tilt Speed	Preset: 250°/sec, Manual: 0.024°/sec~250°/sec
Sequence	Preset(300ea), Swing, Group(6ea), Trace, Tour, Auto Run, Schedule
Preset Accuracy	±0.2°

Operational	
Camera Title	Displayed up to 85 characters
Direction Indicator	Support
Day & Night	Auto(ICR)
Backlight Compensation	BLC, HLC, WDR, SSDR
Wide Dynamic Range	150dB
Digital Noise Reduction	SSNR V
Digital Image Stabilization	Support(built-in gyro sensor)
Defog	Support
Motion Detection	8ea, 8point polygonal zones
Privacy Masking	32ea, rectangular Support - Color: Grey/Green/Red/Blue/Black/White - Mosaic

Design and specifications are subject to change without notice. The latest product information / specification can be found at HanwhaVision.com.
Hanwha Vision is formerly known as Hanwha Techwin.

© Hanwha Vision CO., LTD. All rights reserved.

Gain Control	Low / Middle / High
White Balance	ATW / AWC / Manual / Indoor / Outdoor
Electronic Shutter Speed	Minimum / Maximum / Anti flicker (2~1/12,000sec)
Video Rotation	Flip, Mirror
Analytics	Defocus detection, Directional detection, Fog detection, Face detection, Motion detection, Appear/Disappear, Enter/Exit, Loitering, Tampering, Virtual line, Audio detection, Sound classification, Shock detection
Serial Interface	RS-485(Samsung-T, Pelco-D/P, Panasonic, Bosch, AD, GE, Vicon, Honeywell)
Alarm I/O	Input 4ea / Output 2ea
Alarm Triggers	Analytics, Network disconnect, Alarm input
Alarm Events	File upload via FTP and e-mail Notification via e-mail SD/SDHC/SDXC or NAS recording at event triggers Alarm output PTZ Preset
Audio In	Selectable(mic in/line in) Supply voltage: 2.5VDC(4mA), Input impedance: 2K Ohm
Audio Out	Line out, Max.output level: 1Vrms
Light Type	IR LED (850nm)
IR Viewable Length	500m(1,640.42ft)
Auto Tracking	Support

Network	
Ethernet	RJ-45(10/100BASE-T), SFP(Optional)
Video Compression	H.265/H.264: Main/Baseline/High, MJPEG
Audio Compression	G.711 u-law /G.726 Selectable G.726(ADPCM) 8KHz, G.711 8KHz G.726: 16Kbps, 24Kbps, 32Kbps, 40Kbps AAC-LC: 48Kbps at 16KHz
Smart Codec	Manual(5ea area), WiseStream II
Bitrate Control	H.264/H.265: CBR or VBR MJPEG: VBR
Streaming	Unicast(20 users) / Multicast (128 user) Multiple streaming(Up to 10 profiles)
Protocol	IPv4, IPv6, TCP/IP, UDP/IP, RTP(UDP), RTP(TCP), RTCP,RTSP, NTP, HTTP, HTTPS, SSL/TLS, DHCP, FTP, SMTP, ICMP, IGMP, SNMPv1/v2c/v3(MIB-2), ARP, DNS, DDNS, QoS, UPnP, Bonjour, LLDP, SRTP, NTCIP 1205
Security	HTTPS(SSL) Login Authentication Digest Login Authentication IP Address Filtering User access log 802.1X Authentication(EAP-TLS, EAP-LEAP) Device Certificate(Hanwha Private Root CA)
Application Programming Interface	ONVIF Profile S/G SUNAPI(HTTP API) Wisenet open platform

General	
Webpage Language	English, Korean, Chinese, French, Italian, Spanish, German, Japanese, Russian, Swedish, Portuguese, Czech, Polish, Turkish, Dutch, Hungarian, Greek
Edge Storage	Micro SD/SDHC/SDXC 2slot 512GB
Memory	1024MB RAM, 256MB Flash

Environmental & Electrical	
Operating Temperature / Humidity	24VAC : -50°C~+55°C (-58°F ~ +131°F), Less than 95% RH-Non-Condensing HPoE : -40°C~+55°C (-40°F ~ +131°F) /Less than 95% RH-Non-Condensing * Start up should be done at above -35°C FAN/Heater included
Storage Temperature / Humidity	-50°C~+60°C (-58°F~+140°F) / Less than 90% RH

Design and specifications are subject to change without notice. The latest product information / specification can be found at HanwhaVision.com.
Hanwha Vision is formerly known as Hanwha Techwin.

© Hanwha Vision CO., LTD. All rights reserved.

Certification	IP66, IK10
Input Voltage	24VAC, HPoE(IEEE802.3bt, Class7)
Power Consumption	24VAC: Max. 92W (typical : 30W) HPoE : Max. 60W (typical : 30W)

Mechanical	
Color / Material	Body: Ivory / Aluminum+Plastic, Head: Black / Aluminum+Plastic
Product Dimensions / Weight	ø236.9x407.7mm(9.33x16.05"), 7.1Kg(15.65 lb)
Ceiling Mount (Assy)	SBP-300CM
Wall Mount	SBP-300WM1, SBP-300WM
Pole Mount	SBP-300PM1
Parapet Mount	SBP-300LM
Corner Mount	SBP-300KM1
Other Compatible Models	SBP-303HF

DORI (EN62676-4 standard)	
Detect (25PPM/ 8PPF)	Wide: 68.4m(224.5ft) / Tele: 3577.4m(11736.7ft)
Observe (63PPM/ 19PPF)	Wide: 27.4m(89.8ft) / Tele: 1430.9m(4694.7ft)
Recognize (125PPM/ 38PPF)	Wide: 13.7m(44.9ft) / Tele: 715.5m(2347.3ft)
Identify (250PPM/ 76PPF)	Wide: 6.8m(22.5ft) / Tele: 357.7m(1173.7ft)

Design and specifications are subject to change without notice. The latest product information / specification can be found at HanwhaVision.com.
Hanwha Vision is formerly known as Hanwha Techwin.

© Hanwha Vision CO., LTD. All rights reserved.

XNP-6550RH

2M H.265 55x IR PTZ Camera

CAD

Unit:mm [inch]

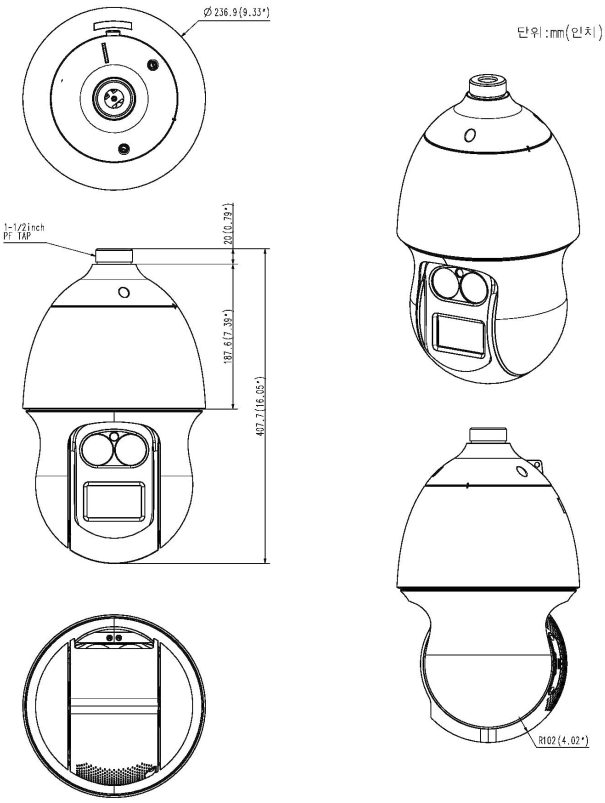

Design and specifications are subject to change without notice. The latest product information / specification can be found at HanwhaVision.com.
Hanwha Vision is formerly known as Hanwha Techwin.

© Hanwha Vision CO., LTD. All rights reserved.