Hanwha Vision

Network BOX

XNB-9002

4K Box Camera

Key Features

- 4K resolution
- 0.05Lux@F1.2 (Color), 0.005Lux(B/W)
- Max. 30fps@4K (H.265/H.264)
- Day & Night (ICR), extreme WDR (120dB)
- DIS with built-in Gyro sensor
- Video Analytics (Defocus, Directional detection, Audio detection, Shock detection, Face/Upper body detection)
- Digital auto tracking, Sound classification
- Motion detection, Handover
- Dual SD slots (Max. 1TB)
- WiseStream II support

Compatible Devices

SHB-4301HP

STB-4150V

Design and specifications are subject to change without notice. The latest product information / specification can be found at HanwhaVision.com.
Hanwha Vision is formerly known as Hanwha Techwin.

© Hanwha Vision CO., LTD. All rights reserved.

XNB-9002

4K Box Camera

Specifications

Video	
Imaging Device	1/2.8" CMOS
Resolution	3840x2160, 3328x1872, 3072x1728, 2592x1944, 2688x1520, 1920x1080, 1600x1200, 1280x1024, 1280x960, 1280x720, 1024x768, 800x600, 800x448, 720x576, 720x480, 640x480, 640x360, 320x240
Max. Framerate	H.265/H.264: Max. 30fps/25fps(60Hz/50Hz) MJPEG: Max. 30fps(@8MP Max. 5fps)
Min. Illumination	Color: 0.05Lux(F1.2, 1/30sec, 30IRE) BW: 0.005Lux(F1.2, 1/30sec, 30IRE)
Video Out	CVBS: 1.0 Vp-p / 75Ω composite, 720x480(N), 720x576(P) for installation USB: Micro USB Type B, 1280x720 for installation

Lens	
Focus Control	Simple focus
Lens Type	DC auto iris, P iris, Manual, I-CS
Mount Type	C mount, CS mount

Operational	
Camera Title	Displayed up to 85 characters
Day & Night	Auto(ICR)
Backlight Compensation	BLC, HLC, WDR, SSDR
Wide Dynamic Range	extremeWDR(120dB)
Digital Noise Reduction	SSNR V
Digital Image Stabilization	Support(built-in gyro sensor)
Defog	Support
Motion Detection	8ea, 8point Polygonal zones
Privacy Masking	32ea, 4point Quadrangle zones - Color: Gray/Green/Red/Blue/Black/White - Mosaic
Gain Control	Off / Max gain / Manual
White Balance	ATW / NarrowATW / AWC / Manual / Indoor / Outdoor
LDC	Support(Fill/stretch mode)
Electronic Shutter Speed	Minimum / Maximum / Anti flicker(2~1/12,000sec) Prefer shutter control
Video Rotation	Flip, Mirror, Hallway view(90°/270°)
Analytics	Analytics events - Defocus detection, Directional detection, Motion detection, Digital auto tracking, Appear/Disappear, Enter/Exit, Loitering, Tampering, Fog detection, Virtual line, Audio detection, Sound classification, Shock detection, Face/upper body detection
Business Intelligence	People counting, Queue management, Heatmap
Serial Interface	RS-485(Samsung-T, Pelco-D/P, Panasonic, Bosch, AD, GE, Vicon, Honeywell)
Alarm I/O	2 configurable I/O ports
Alarm Triggers	Analytics, Network disconnect, Alarm input, App event, Time schedule, MQTT subscription

Design and specifications are subject to change without notice. The latest product information / specification can be found at HanwhaVision.com.
Hanwha Vision is formerly known as Hanwha Techwin.

© Hanwha Vision CO., LTD. All rights reserved.

Alarm Events	When alarm trigger occurred - File upload(image): e-mail/FTP/SFTP - File upload(video clip): FTP/SFTP - Notification: e-mail - Recording: SD/SDHC/SDXC or NAS recording at event triggers - Alarm output - Handover: PTZ preset, send message by HTTP/HTTPS/TCP - Audio clip playback - MQTT: publication
Audio In	Selectable(mic in/line in/Built-in mic)
Audio Out	Line out

Network	
Ethernet	Metal shielded RJ-45(10/100/1000BASE-T)
Video Compression	H.265/H.264: Main/Baseline/High, MJPEG
Audio Compression	G.711 u-law /G.726 Selectable G.726(ADPCM) 8KHz, G.711 8KHz G.726: 16Kbps, 24Kbps, 32Kbps, 40Kbps AAC-LC: 48Kbps at 16KHz
Smart Codec	Manual(5ea area), WiseStream II
Bitrate Control	H.264/H.265: CBR or VBR MJPEG: VBR
Streaming	Unicast(20 users) / Multicast Multiple streaming(Up to 10 profiles, 3 virtual channel support)
Protocol	IPv4, IPv6, TCP/IP, UDP/IP, RTP(UDP), RTP(TCP), RTCP, RTSP, NTP, HTTP, HTTPS, SSL/TLS, DHCP, FTP/SFTP, SMTP, ICMP, IGMP, SNMPv1/v2c/v3(MIB-2), ARP, DNS, DDNS, QoS, UPnP, Bonjour, LLDP, CDP, SRTP(TCP, UDP Unicast), MQTT
Application Programming Interface	ONVIF Profile S/G/T SUNAPI(HTTP API) Hanwha Vision open platform

Security	
OS / Firmware Protect	Encrypted Firmware, Secure boot, Signed Firmware
User authentication	Digest Authenticaton, Prevent brute-force attacks
Network authentication	IEEE 802.1X(EAP-TLS, EAP-LEAP, EAP-PEAP, MSCHAPv2)
Secure Communication	HTTPS, WSS(WebSocket Secure), SRTP
Access Control	IP-based access control
Data Protect	Encryption Credentials, Encrypt compress for live recording file export
Audit	Access / System / Event Log management
Device ID	Device certificate(Hanwha Vision Root CA)
Secure Storage	HTPM(Hanwha trusted platform module), SDcard partition encrypt

General	
Webpage Language	English, Korean, Chinese, French, Italian, Spanish, German, Japanese, Russian, Portuguese, Czech, Polish, Turkish, Dutch, Hungarian, Greek
Edge Storage	Micro SD/SDHC/SDXC 2slot Max. 1TB(512GBx2)
Edge Storage(OnCloud)	Micro SD/SDHC/SDXC 2slot Max. 2TB(1TBx2) * Hanwha Vision branded microSD cards have been certified and recommended for OnCloud edge recording.
Memory	4GB RAM, 512MB Flash

Environmental & Electrical	
Operating Temperature / Humidity	-10°C~+55°C(+14°F~+131°F) / 0~95% RH (non-condensing)
Storage Temperature / Humidity	-50°C~+60°C(-58°F~+140°F) / 0~90% RH
Input Voltage	PoE(IEEE802.3af, class3), 12VDC, 24VAC

Design and specifications are subject to change without notice. The latest product information / specification can be found at HanwhaVision.com.
Hanwha Vision is formerly known as Hanwha Techwin.

© Hanwha Vision CO., LTD. All rights reserved.

Power Consumption	PoE: Max 12.95W, typical 8.2W 12VDC: Max 11.5W, typical 7.5W 24VAC: Max 13.5W, typical 8.9W Power redundancy failover

Mechanical	
Color / Material	Black / Aluminum
Product Dimensions / Weight	81(W)x67(H)x165(D)mm(3.19x2.64x6.48"), 880g(1.94 lb)
Housing (Box)	SHB-4301HP, SHB-4200/4200H

Certifications & Standards	
EMC	FCC 47 CFR 15 Subpart B Class A ICES-3(A)/NMB-3(A) CE/UKCA - EN 55032 Class A, EN 50130-4, EN 61000-3-2, EN 61000-3-3 VCCI CISPR 32 Class A RCM AS/NZS CISPR 32 Class A KS C 9832 Class A , KS C 9835
Safety	UL 60950-1, CAN/CSA C22.2 NO. 60950-1 IEC/EN 62471

Design and specifications are subject to change without notice. The latest product information / specification can be found at HanwhaVision.com.
Hanwha Vision is formerly known as Hanwha Techwin.

© Hanwha Vision CO., LTD. All rights reserved.

XNB-9002

4K Box Camera

CAD

Unit:mm [inch]

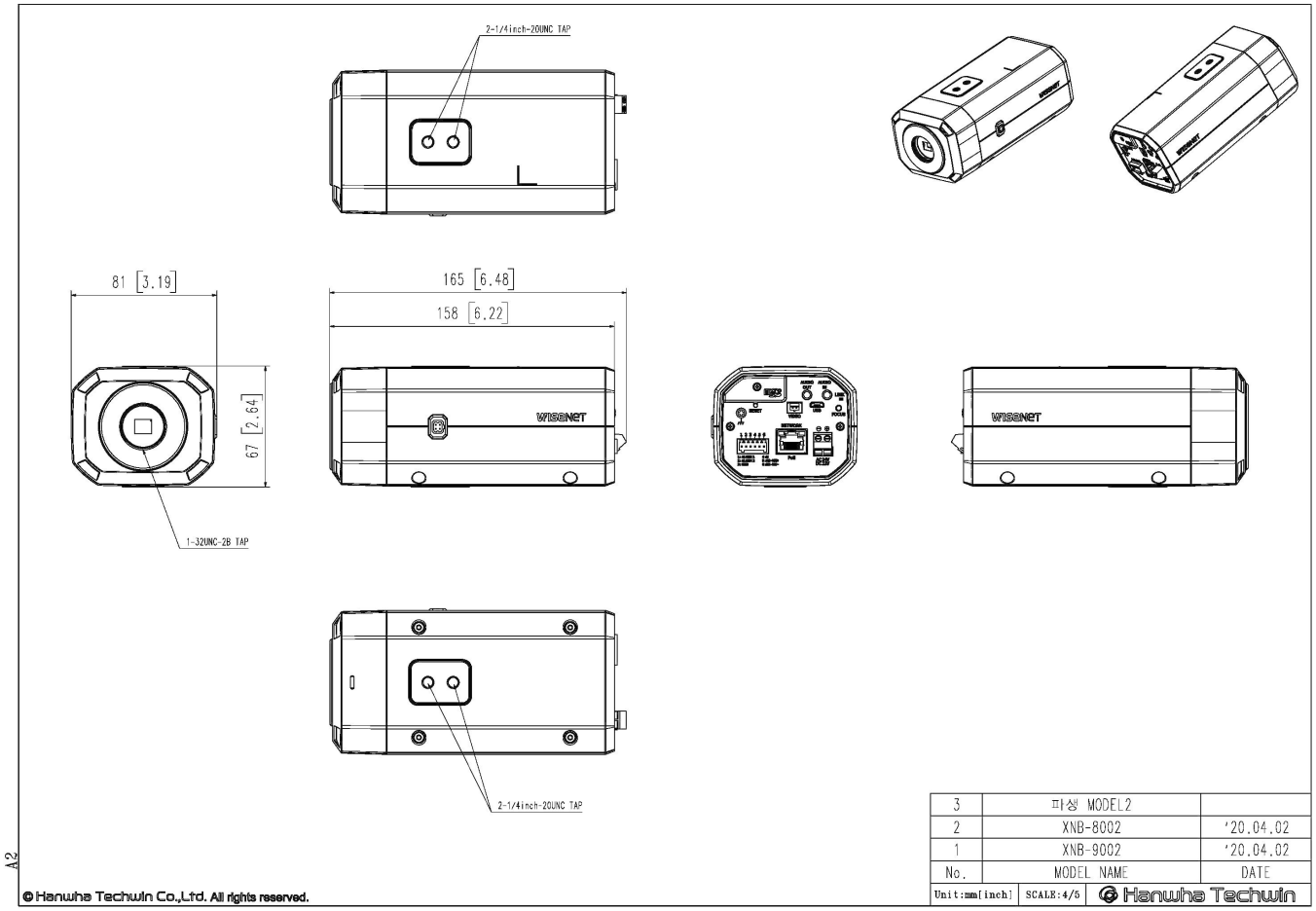

Design and specifications are subject to change without notice. The latest product information / specification can be found at HanwhaVision.com.
Hanwha Vision is formerly known as Hanwha Techwin.

© Hanwha Vision CO., LTD. All rights reserved.