Hanwha Vision

Network BOX

# XNB-8003

6MP AI Box Camera

## Key Features

- 6MP resolution
- Color: 0.03 Lux (F1.2, 1/30sec, 30IRE), BW: 0.003 Lux (F1.2, 1/30sec, 30IRE)
- Maximum 30 fps (H.265/H.264)
- Day & Night (ICR), extremeWDR (120dB)
- WiseNR II (Based on AI engine), WiseStream III (Based on AI engine)
- Analytics events based on AI engine (NPU) : Object detection (Person/Face/Vehicle - car, truck, bus, bicycle, motorcycle/License plate),
IVA (Virtual line/Area, Enter/Exit, Loitering, Direction, Intrusion)
- Analytics events : Defocus detection, Motion detection, Tampering, Fog detection
Audio detection, Sound classification, Shock detection, Appear/Disappear

Design and specifications are subject to change without notice. The latest product information / specification can be found at HanwhaVision.com.
Hanwha Vision is formerly known as Hanwha Techwin.

© Hanwha Vision CO., LTD. All rights reserved.

# XNB-8003

6MP AI Box Camera

## Specifications

| Video | |
|---|---|
| Imaging Device | 1/1.8" CMOS |
| Resolution | 3328x1872, 3072x1728, 2592x1944, 2688x1520, 1920x1080, 1600x1200, 1280x1024, 1280x960, 1280x720, 1024x768, 800x600, 800x448, 720x576, 720x480, 640x480, 640x360, 320x240 |
| Max. Framerate | H.265/H.264: Max. 30fps/25fps(60Hz/50Hz)<br>MJPEG: Max. 30fps(@6MP Max. 5fps) |
| Min. Illumination | Color: 0.03Lux(F1.2, 1/30sec, 30IRE)<br>BW: 0.003Lux(F1.2, 1/30sec, 30IRE) |
| Video Out | CVBS: 1.0 Vp-p / 75Ω composite, 720x480(N), 720x576(P) for installation<br>USB: Micro USB Type B, 1280x720 for installation |

| Lens | |
|---|---|
| Focus Control | Simple focus |
| Lens Type | DC auto iris, P-iris, Manual, I-CS |
| Mount Type | C mount, CS mount |

| Operational | |
|---|---|
| Camera Title | Displayed up to 85 characters |
| Day & Night | Auto(ICR) / Color / B/W / External / Schedule |
| Backlight Compensation | BLC, HLC, WDR, SSDR |
| Wide Dynamic Range | extremeWDR(120dB) |
| Digital Noise Reduction | WiseNR II (Based on AI engine), SSNR V |
| Digital Image Stabilization | Support(built-in gyro sensor) |
| Defog | Support |
| Motion Detection | 8ea, 8point Polygonal zones |
| Privacy Masking | 32ea, 4point Quadrangle zones<br>- Color: Gray/Green/Red/Blue/Black/White<br>- Mosaic |
| Gain Control | Off / Max Gain / Manual |
| White Balance | ATW / NarrowATW / AWC / Manual / Indoor / Outdoor |
| LDC | Support(Fill/stretch mode) |
| Electronic Shutter Speed | Minimum / Maximum / Anti flicker(2~1/12,000sec)<br>prefer shutter control(Based on AI engine) |
| Digital PTZ | Support(Preset, Group) |
| Video Rotation | Flip, Mirror, Hallway view(90°/270°) |
| Analytics | Classified object type: Person/Face/Vehicle(Type: car/bus/truck/motorcycle/bicycle)/License plate<br>Attributes: Vehicle(Type: car/bus/truck/motorcycle/bicycle)<br>Support DetectionShot<br>Analytics events based on AI engine<br>- Object detection, Virtual line(Crossing/Direction), Virtual area(Loitering/Intrusion/Enter/Exit), Motion detection<br>Analytics events<br>- Defocus detection, Tampering, Fog detection, Audio detection, Sound classification, Shock detection, Virtual area(Appear/Disappear) |

Design and specifications are subject to change without notice. The latest product information / specification can be found at HanwhaVision.com.
Hanwha Vision is formerly known as Hanwha Techwin.

© Hanwha Vision CO., LTD. All rights reserved.

| | |
|---|---|
| Business Intelligence | Based on AI engine: People/Vehicle counting, Queue management, Heatmap |
| Serial Interface | RS-485(Samsung-T, Pelco-D/P, Panasonic, Bosch, AD, GE, Vicon, Honeywell) |
| Alarm I/O | 2 configurable I/O ports |
| Alarm Triggers | Analytics, Network disconnect, Alarm input, App event, Time schedule, MQTT subscription |
| Alarm Events | When alarm trigger occurred<br>- File upload(image): e-mail/FTP/SFTP<br>- File upload(video clip): FTP/SFTP<br>- Notification: e-mail<br>- Recording: SD/SDHC/SDXC or NAS recording at event triggers<br>- Alarm output<br>- Handover: PTZ preset, send message by HTTP/HTTPS/TCP<br>- Audio clip playback<br>- MQTT: publication |
| Audio In | Selectable(mic in/line in/built-in MIC) |
| Audio Out | Line out |

| Network | |
|---|---|
| Ethernet | Metal shielded RJ-45(10/100/1000BASE-T) |
| Video Compression | H.265/H.264: Main/Baseline/High, MJPEG |
| Audio Compression | G.711 u-law /G.726 Selectable<br>G.726(ADPCM) 8KHz, G.711 8KHz<br>G.726: 16Kbps, 24Kbps, 32Kbps, 40Kbps<br>AAC-LC: 48Kbps at 16KHz |
| Smart Codec | Manual(5ea area), WiseStreamIII(Based on AI engine) |
| Video Quality Adjustment | H.264/H.265: Target bitrate level control<br>MJPEG: Target bitrate level control |
| Bitrate Control | H.264/H.265: CBR or VBR<br>MJPEG: VBR |
| Streaming | Unicast(20 users) / Multicast<br>Multiple streaming(Up to 10 profiles, 3 virtual channel support) |
| Protocol | IPv4, IPv6, TCP/IP, UDP/IP, RTP(UDP), RTP(TCP), RTCP, RTSP, NTP, HTTP, HTTPS, SSL/TLS, DHCP, FTP/SFTP, SMTP, ICMP, IGMP, SNMPv1/v2c/v3(MIB-2), ARP, DNS, DDNS, QoS, UPnP, Bonjour, LLDP, CDP, SRTP(TCP, UDP Unicast), MQTT |
| Application Programming Interface | ONVIF Profile S/G/T/M<br>SUNAPI(HTTP API)<br>Wisenet open platform |

| Security | |
|---|---|
| OS / Firmware Protect | Encrypted Firmware, Secure boot, Signed Firmware |
| User authentication | Digest Authenticaton, Prevent brute-force attacks |
| Network authentication | IEEE 802.1X(EAP-TLS, EAP-LEAP, EAP-PEAP, MSCHAPv2) |
| Secure Communication | HTTPS, WSS(WebSocket Secure), SRTP |
| Access Control | IP-based access control |
| Data Protect | Encryption Credentials, Encrypt compress for live recording file export |
| Audit | Access / System / Event Log management |
| Device ID | Device certificate(Hanwha Vision Root CA) |
| Secure Storage | TPM, HTPM(Hanwha trusted platform module), SDcard partition encrypt |
| Security Certificate | TPM with FIPS 140-2 level 2 |

| General | |
|---|---|
| Webpage Language | English, Korean, Chinese, French, Italian, Spanish, German, Japanese, Russian, Portuguese, Czech, Polish, Turkish, Dutch, Hungarian, Greek |
| Edge Storage | Micro SD/SDHC/SDXC 2slot Max. 1TB(512GBx2) |
| Memory | 4GB RAM, 512MB Flash |

## Environmental & Electrical

Design and specifications are subject to change without notice. The latest product information / specification can be found at HanwhaVision.com.
Hanwha Vision is formerly known as Hanwha Techwin.

© Hanwha Vision CO., LTD. All rights reserved.

| | |
|---|---|
| Operating Temperature / Humidity | -10°C~+55°C(-14°F~+131°F) / 0~95% RH(non-condensing) |
| Storage Temperature / Humidity | -50°C~+60°C(-58°F~+140°F) / 0~90% RH |
| Input Voltage | PoE(IEEE802.3af, Class3), 12VDC |
| Power Consumption | PoE: Max 12.95W, typical 9.8W<br>12VDC: Max 19W, typical 9.5W |

| Mechanical | |
|---|---|
| Color / Material | Black / Aluminum |
| Product Dimensions / Weight | 81(W)x67(H)x165(D)mm(3.19x2.64x6.48"), 880g(1.94 lb) |
| Pole Mount | SBP-300PMW2+SBB-300PMW1 |
| Housing (Box) | SHB-4301HP, SHB-4200/4200H |

| Certifications & Standards | |
|---|---|
| EMC | FCC 47 CFR 15 Subpart B Class A<br>ICES-3(A)/NMB-3(A)<br>CE/UKCA<br>- EN 55032 Class A, EN 50130-4, EN 61000-3-2, EN 61000-3-3<br>VCCI CISPR 32 Class A<br>RCM AS/NZS CISPR 32 Class A<br>KS C 9832 Class A , KS C 9835 |
| Safety | UL 62368-1, CAN/CSA C22.2 NO. 62368-1<br>IEC/EN 62471 |

Design and specifications are subject to change without notice. The latest product information / specification can be found at HanwhaVision.com.
Hanwha Vision is formerly known as Hanwha Techwin.

© Hanwha Vision CO., LTD. All rights reserved.

# XNB-8003

6MP AI Box Camera

## CAD

**Unit:**mm [inch]

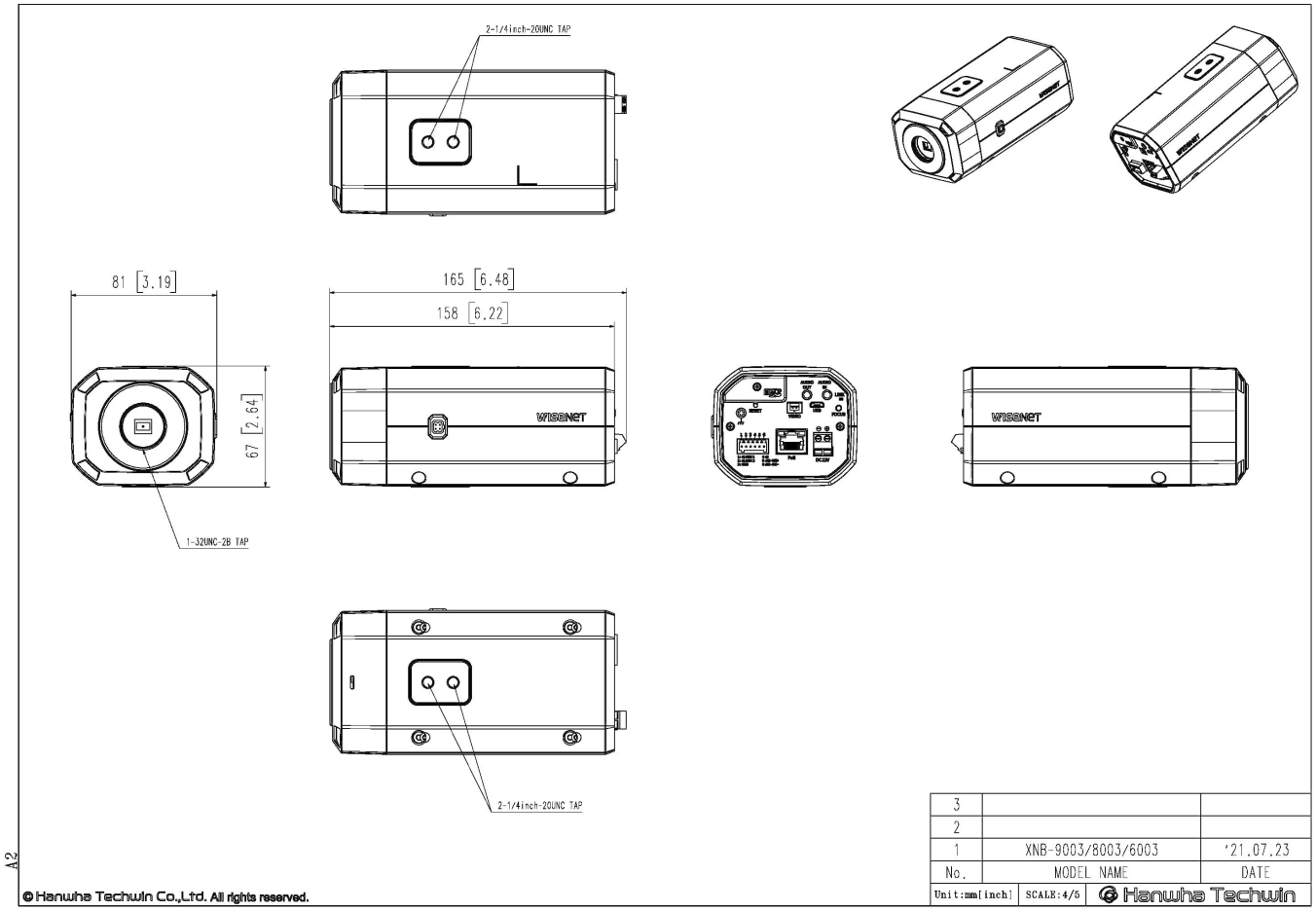


Design and specifications are subject to change without notice. The latest product information / specification can be found at HanwhaVision.com.
Hanwha Vision is formerly known as Hanwha Techwin.

© Hanwha Vision CO., LTD. All rights reserved.