Hanwha Vision

# NETWORK CAMERA

## User Manual

TNF-9010

CE

# Network Camera
User Manual

**Copyright**

**©2020 Hanwha Vision Co., Ltd. All rights reserved.**

**Trademark**

Each of trademarks herein is registered. The name of this product and other trademarks mentioned in this manual are the registered trademark of their respective company.

**Restriction**

Copyright of this document is reserved. Under no circumstances, this document shall be reproduced, distributed or changed, partially or wholly, without formal authorization.

**Disclaimer**

Hanwha Vision makes the best to verify the integrity and correctness of the contents in this document, but no formal guarantee shall be provided. Use of this document and the subsequent results shall be entirely on the user's own responsibility. Hanwha Vision reserves the right to change the contents of this document without prior notice.

※ **Design and specifications are subject to change without prior notice.**

※ **The initial administrator ID is "admin" and the password should be set when logging in for the first time.**
**Please change your password every three months to safely protect personal information and to prevent the damage of the information theft.**
**Please, take note that it's a user's responsibility for the security and any other problems caused by mismanaging a password.**

## IMPORTANT SAFETY INSTRUCTIONS

1. Read these instructions.
2. Keep these instructions.
3. Heed all warnings.
4. Follow all instructions.
5. Do not use this apparatus near water.
6. Clean the contaminated area on the product surface with a soft, dry cloth or a damp cloth.
   (Do not use a detergent or cosmetic products that contain alcohol, solvents or surfactants or oil constituents as they may deform or cause damage to the product.)
7. Do not block any ventilation openings, Install in accordance with the manufacturer's instructions.
8. Do not install near any heat sources such as radiators, heat registers, stoves, or other apparatus (including amplifiers) that produce heat.
9. Do not defeat the safety purpose of the polarized or grounding-type plug. A polarized plug has two blades with one wider than the other. A grounding type plug has two blades and a third grounding prong. The wide blade or the third prong are provided for your safety. If the provided plug does not fit into your outlet, consult an electrician for replacement of the obsolete outlet.
10. Protect the power cord from being walked on or pinched particularly at plugs, convenience receptacles, and the point where they exit from the apparatus.
11. Only use attachments/ accessories specified by the manufacturer.
12. Use only with the cart, stand, tripod, bracket, or table specified by the manufacturer, or sold with the apparatus. When a cart is used, use caution when moving the cart/ apparatus combination to avoid injury from tip-over.

13. Unplug this apparatus during lighting storms or when unused for long periods of time.
14. Refer all servicing to qualified service personnel. Servicing is required when the apparatus has been damaged in any way, such as power-supply cord or plug is damaged, liquid has been spilled or objects have fallen into the apparatus, the apparatus has been exposed to rain or moisture, does not operate normally, or has been dropped.
15. This product is intended to be supplied by a Listed Power Supply Unit marked "Class 2" or "LPS" and rated from 12 Vdc, 0.84 A or PoE, 0.27 A.
16. This product is intended to be supplied by isolation power.
17. If you use excessive force when installing the product, the camera may be damaged and malfunction.
    If you forcibly install the product using non-compliant tools, the product may be damaged.
18. Do not install the product in a place where chemical substances or oil mist exists or may be generated. As edible oils such as soybean oil may damage or warp the product, do not install the product in the kitchen or near the kitchen table.
    This may cause damage to the product.
19. When installing the product, be careful not to allow the surface of the product to be stained with chemical substance.
    Some chemical solvents such as cleaner or adhesives may cause serious damage to the product's surface.
20. If you install/disassemble the product in a manner that has not been recommended, the production functions/ performance may not be guaranteed.
    Install the product by referring to "Installation & connection" in the user manual.
21. Installing or using the product in water can cause serious damage to the product.
22. Although a rapid change in temperature could cause frost inside the dome, there will be no problem with the video.
23. This device has been verified using STP cable. The use of appropriate GND grounding and STP cable is recommended to effectively protect your product and property from transient voltage, thunderstroke, communication interruption.

## WARNING

TO REDUCE THE RISK OF FIRE OR ELECTRIC SHOCK, DO NOT EXPOSE THIS PRODUCT TO RAIN OR MOISTURE. DO NOT INSERT ANY METALLIC OBJECT THROUGH THE VENTILATION GRILLS OR OTHER OPENNINGS ON THE EQUIPMENT.

Apparatus shall not be exposed to dripping or splashing and that no objects filled with liquids, such as vases, shall be placed on the apparatus.

To prevent injury, this apparatus must be securely attached to the Wall/ceiling in accordance with the installation instructions.

## CAUTION

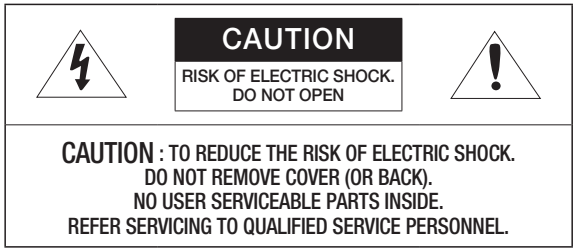


## EXPLANATION OF GRAPHICAL SYMBOLS

The lightning flash with arrowhead symbol, within an equilateral triangle, is intended to alert the user to the presence of "dangerous voltage" within the product's enclosure that may be of sufficient magnitude to constitute a risk of electric shock to persons.

The exclamation point within an equilateral triangle is intended to alert the user to the presence of important operating and maintenance (servicing) instructions in the literature accompanying the product.

## Class I construction

An apparatus with CLASS I construction shall be connected to a MAINS socket outlet with a protective earthing connection.

## Battery

Batteries(battery pack or batteries installed) shall not be exposed to excessive heat such as sunshine, fire or the like.

The battery cannot be replaced.

## Disconnection Device

Disconnect the main plug from the apparatus, if it's defected. And please call a repair man in your location.

**When used outside of the U.S., it may be used HAR code with fittings of an approved agency is employed.**

## CAUTION

RISK OF EXPLOSION IF BATTERY IS REPLACED BY AN INCORRECT TYPE.
DISPOSE OF USED BATTERIES ACCORDING TO THE INSTRUCTIONS.

## ATTENTION

IL Y A RISQUE D'EXPLOSION SI LA BATTERIE EST REMPLACÉE PAR UNE BATTERIE DE TYPE INCORRECT.
METTRE AU REBUT LES BATTERIES USAGÉES CONFORMÉMENT AUX INSTRUCTIONS.

## CAUTION

These servicing instructions are for use by qualified service personnel only.
To reduce the risk of electric shock do not perform any servicing other than that contained in the operating instructions unless you are qualified to do so.

The Test Monitor Out port of the product is provided for easier installation, and is not recommended for monitoring purposes.

Please use the input power with just one camera and other devices must not be connected.

Before connecting the Power Terminal Block, you need to unplug the power plug from the outlet first.

**The ITE is to be connected only to PoE networks without routing to the outside plant.**

**The wired LAN hub providing power over the Ethernet (PoE) in accordance with IEEE 802.3.af shall be a UL Listed device with the output evaluated as a Limited Power Source as defined in UL60950-1 or PS2 as defined in UL62368-1.**

**Unit is intended for installation in a Network Environment 0 as defined in IEC TR 62102. As such, associated Ethernet wiring shall be limited to inside the building.**

Please read the following recommended safety precautions carefully.

- Do not place this apparatus on an uneven surface.
- Do not install on a surface where it is exposed to direct sunlight, near heating equipment or heavy cold area.
- Do not place this apparatus near conductive material.
- Do not attempt to service this apparatus yourself.
- Do not place a glass of water on the product.
- Do not install near any magnetic sources.
- Do not block any ventilation openings.
- Do not place heavy items on the product.
- Please wear protective gloves when installing/removing the camera.
  The high temperature of the product surface may cause a burn.

User's Manual is a guidance book for how to use the products.

The meaning of the symbols are shown below.

- Reference : In case of providing information for helping of product's usages
- Notice : If there's any possibility to occur any damages for the goods and human caused by not following the instruction

※ Please read this manual for the safety before using of goods and keep it in the safe place.

We do not guarantee the quality of third-party products (e.g. lenses, accessories) that you separately purchase.

In particular installation environments, there might be interference in radio communications. When interference of electromagnetic waves occurs between the product and radio communication device, it is recommended to keep a certain distance between the two or change the direction of the receiving antenna.

# CONTENTS


## OVERVIEW 3

3 Important Safety Instructions
6 Recommended PC Specifications
6 Recommended Micro SD/SDHC/SDXC Memory Card Specifications
6 NAS recommended specs
7 What's Included
8 Optional Accessories for Installation
8 At a Glance

## INSTALLATION & CONNECTION 10

10 Installation
16 Connecting with other Device

## NETWORK CONNECTION AND SETUP 19

19 Connecting the Camera Directly to Local Area Networking
19 Connecting the Camera Directly to a DHCP Based DSL/Cable Modem
20 Using Device Manager
20 Automatically searching camera
20 Configuring IP address
21 Manually registering camera
21 Automatically configuring IP
22 Port Range Forward (Port Mapping) Setup
23 Connecting to the Camera from a Shared Local PC
23 Connecting to the Camera from a Remote PC via the Internet

## WEB VIEWER 24

24 Connecting to the Camera
25 Password setting
25 Login
25 Camera Web Viewer Setup

## APPENDIX 26

26 Troubleshooting

## RECOMMENDED PC SPECIFICATIONS

- CPU : Intel(R) Core(TM) i7 3.4 GHz or higher
- RAM : 8G or higher
- Recommended browser: Chrome
- Supported browsers: Chrome, Safari, Firefox, MS Edge(chromium based)
- Supported OS : Windows, Mac, Linux, Android, iOS, Chrome
- Verification environment
  - Windows 10: Google Chrome version 80 or later, Firefox version 72 or later, MS Edge version 83 or later
  - Mac 10.13/14: Safari version 11.0.1 or later

※ The video play performance of the web viewer depends on the performance of the user's CPU and GPU.

## RECOMMENDED MICRO SD/SDHC/SDXC MEMORY CARD SPECIFICATIONS

- Recommended capacity : 16GB to 512GB (MLC type required)
- Recommended Manufacturers : SanDisk, Transcend
- Product Type : High endurance
- The compatibility varies depending on the card manufacturers and types.

## NAS RECOMMENDED SPECS

- Recommended capacity : 200GB or higher is recommended.
- For this camera, you are recommended to use a NAS with the following manufacturer's specs.
  Recommended products : QNAP NAS, Synology NAS

## WHAT'S INCLUDED

Please check if your camera and accessories are all included in the product package.
(As for each sales country, accessories are not the same.)

| Appearance | Item Name | Quantity | Description |
|---|---|---|---|
| | Camera | 1 | |
| | Quick Guide (Optional) | 1 | |
| | Cable for the testing monitor | 1 | Used to test the camera connection to a portable display device |
| | Template | 1 | Product installation guide |
| | Audio/alarm cable | 1 | Used to connect with the audio and alarm port |
| | Power Terminal Block | 1 | Plugged in the power plug |

| Appearance | Item Name | Quantity | Description |
|---|---|---|---|
| | Power Cable | 1 | Used to plug into the power port |
| | Machine Screws | 3 | Used to attach the camera body to the mount plate |
| | Connector cover | 1 | Used to protect power port and audio/alarm port from dust |

## OPTIONAL ACCESSORIES FOR INSTALLATION

You can purchase appropriate optional accessories available.

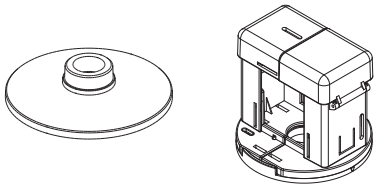

| Model name | Hanging Mount | Mount for race way | All |
|---|---|---|---|
| TNF-9010 | SBP-167HMW | SBP-122WM | SBP-300LMW (Parapet Mount)<br>SBP-300CMW (Ceiling Mount)<br>SBP-300WMW (Wall Mount)<br>SBP-300WMW1 (Wall Mount)<br>SBP-300NBW (Instalation Box)<br>SBP-300NBW (Wall Mount Base)<br>SBP-300PMW (Pole Mount)<br>SBP-300KMW (Corner Mount) |

## AT A GLANCE

### Appearance

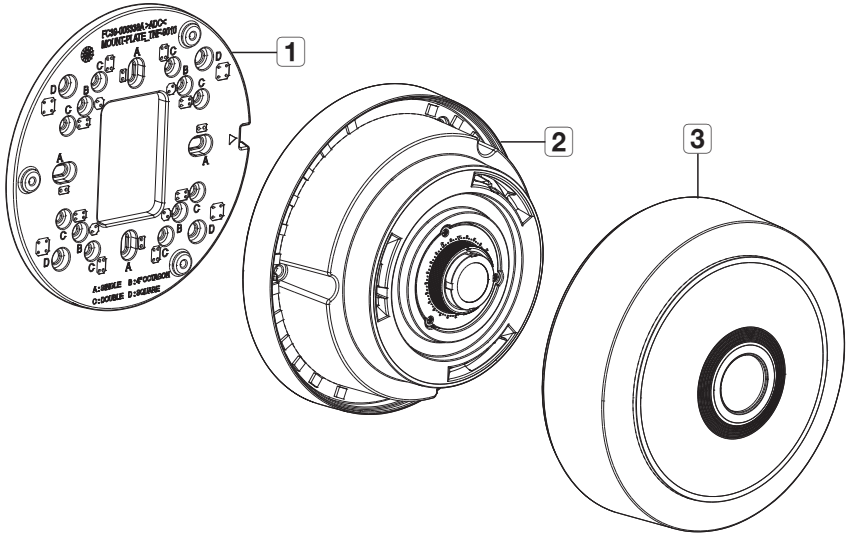


| Item | Description |
|---|---|
| 1 Mount plate | Plate that fixes the camera when mounting it to the ceiling or attaching it to a separately sold mount. |
| 2 Camera body | Body part where the camera lens and connection terminals are included. |
| 3 Top cover | Case cover used to protect the lens and the main unit. |

Inside

Rear side

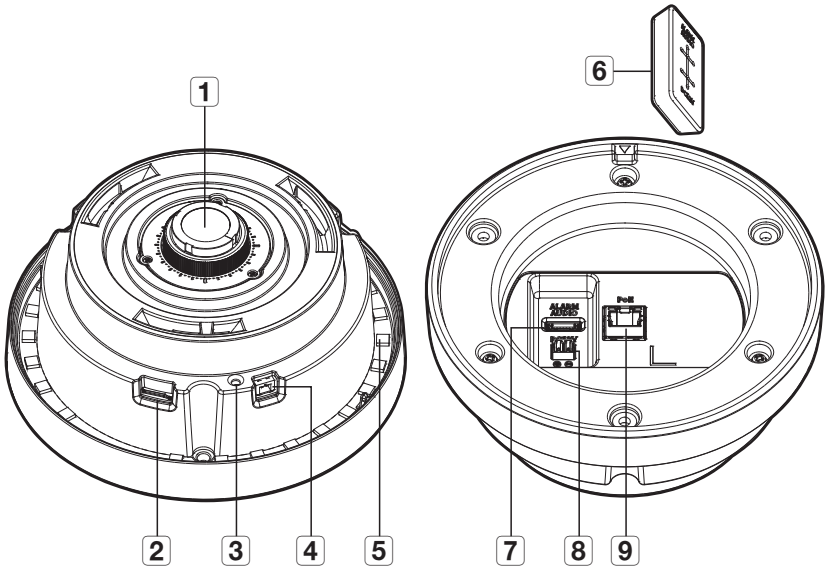


| Item | Description |
|---|---|
| 1 Fisheye lens | This lens has 360˚ vision and it can record video panoramically. |
| 2 Micro SD card slot | Compartment for the Micro SD card. |
| 3 Reset Button | The button restores all camera settings to the factory default.<br>Press and hold for about 5 seconds to reboot the system.<br>! If you reset the camera, the network settings will be adjusted so that DHCP can be enabled. If there is no DHCP server in the network, you must run the Device Manager program to change the basic network settings such as IP address, Subnet mask, Gateway, etc., before you can connect to the network. |
| 4 Test monitor out port | Output port for test monitoring the video output. Use the test monitor cable to connect to a mobile display and check the test video. |
| 5 LED light | LED light is displayed in different colors depending on the condition of the vehicle parking detection. |

| Item | Description |
|---|---|
| 6 Connector cover | An anti-dust rubber cover for DC 12V power and audio/alarm port. |
| 7 Audio/Alarm cable port | Plug in the audio and alarm cable to this port to connect with external alarm device/ microphone/speaker. |
| 8 Power port (DC 12 V) | Port for power terminal block. |
| 9 Network Port | Used to connect the PoE or Ethernet cable for network connection. |

## INSTALLATION

### Precautions before installation

Ensure you read out the following instructions before installing the camera:

- Select an installation site that can hold at least 5 times the camera's weight.
- Stuck-in or peeled-off cables can cause damage to the product or a fire.
- For safety purposes, keep anyone else away from the installation site.
  And put aside personal belongings from the site, just in case.
- If the product is installed with excessive force, it may cause damage to the camera due to malfunction.
  Forcing assembly using non-compliant tools may damage the product.

### Disassembling

1. Peel off the tape that holds the mount plate and camera body, and detach the mount plate.

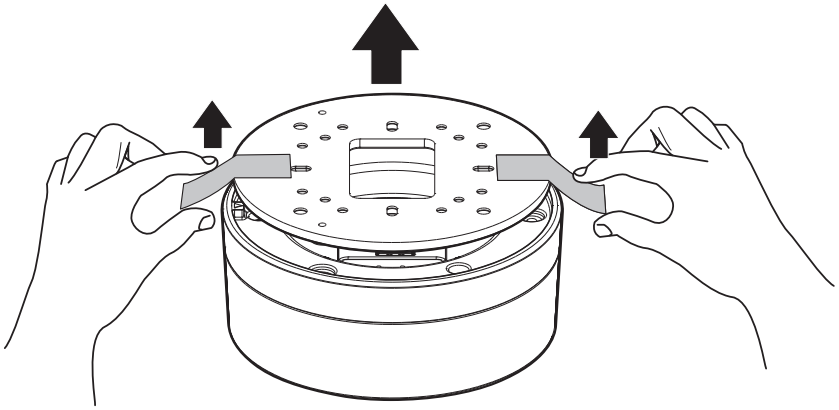

2. Turn the top cover in the direction of the arrow to remove it.

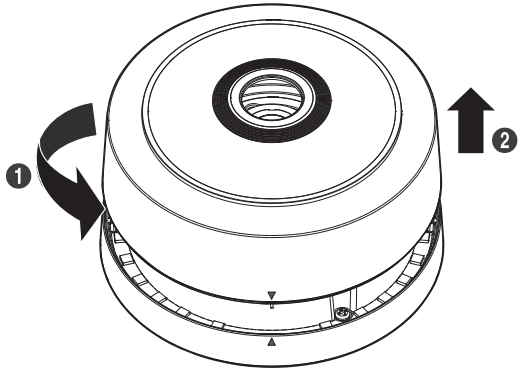


3. Peel off the camera lens protective film.

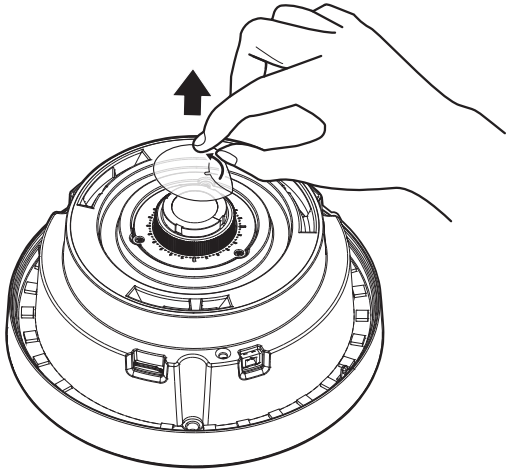

## Inserting a Micro SD card

Slide the Micro SD card into the Micro SD card slot on the camera module in the direction of the arrow.

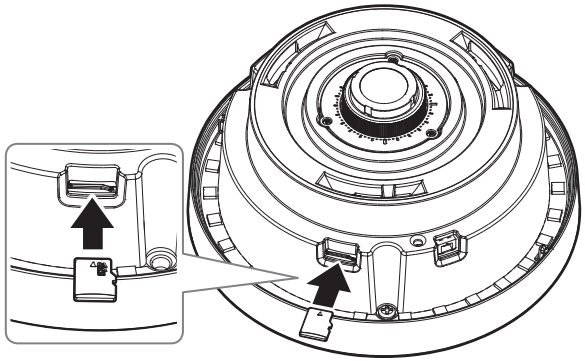

- Before installing the camera, the Micro SD card should be inserted while the power source and the body are separated.
- Do not forcefully insert it in the reverse direction. It might damage your Micro SD card and your product.
- When it rains or the humidity is high, insertion or ejection of a Micro SD card is not recommended.
- Disassembly of the product cover should be finished within 5 minutes, or there will be the risk of internal dew condensation.

## Removing a Micro SD card

Gently press down on the exposed end of the Micro SD card as shown in the diagram to eject the Micro SD card from the slot.

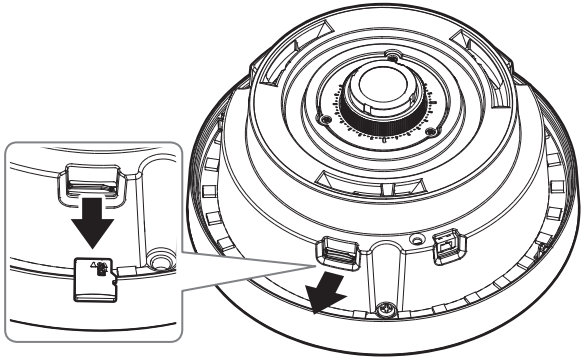

- Before removing the Micro SD card, in <**Setup** ( ⚙ )>-<**Event**>-<**Storage**>, set the device to <**Off**> and press the [**Apply**] button and turn the camera off.
- If you turn off the camera or remove the Micro SD card that contains data from the product, the data may be lost or damaged.

### LED integrated usage mode

LED displays a single solid color regardless of the direction.

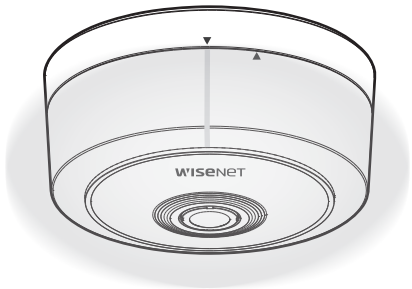


Single color

### LED separate usage mode

The left and right sides (based on the logo position) of LED each display a different color.

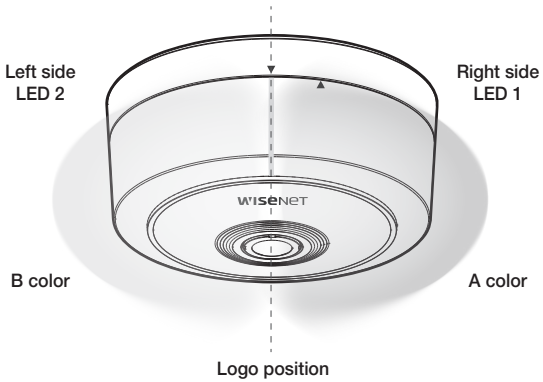


- Make sure the camera direction is properly oriented when using the LED separate usage mode.
- You can access the camera web viewer and set the separate usage mode in <**Setup**> - <**Event**> - <**LED indicator**>.

### Attaching the camera to a mount or structure

1. Install the mount plate using appropriate screws (not provided) in the location you want

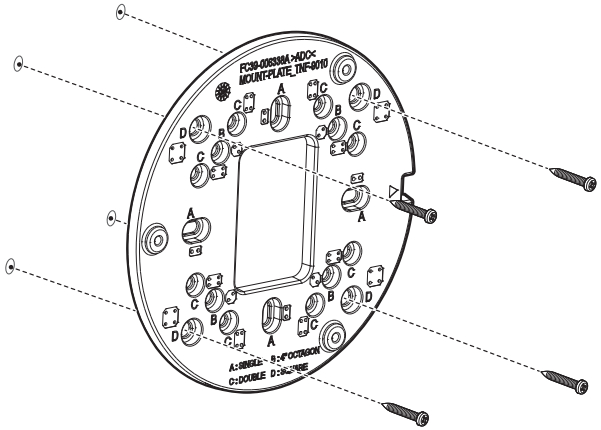


2. Pull out necessary cables among network/power/audio/alarm cables through the hole in the mount plate.

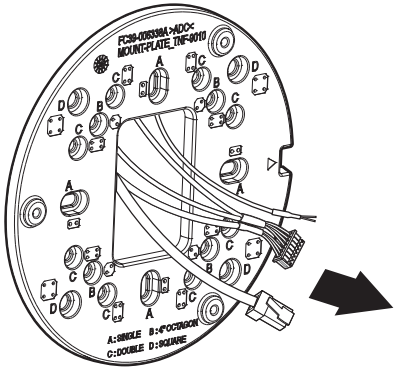

[Installing the network cable]

3. Connect the network cable to the network port of the camera body.

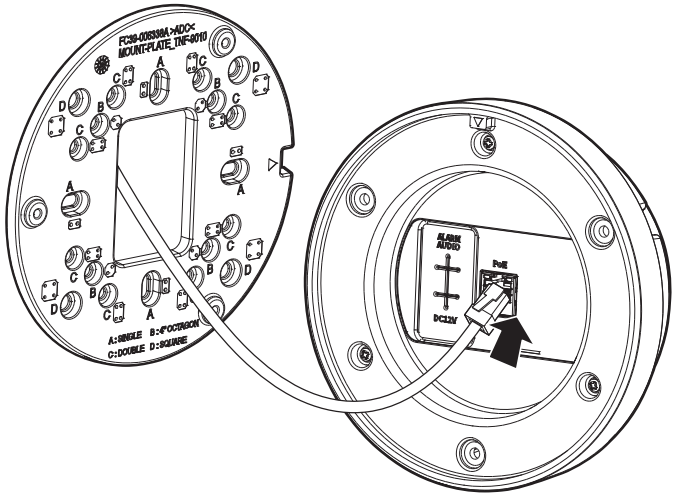


[Installing the power cable (for DC power)]

4. Pass the power cable through the connector cover as shown in the figure, and connect to the power terminal block

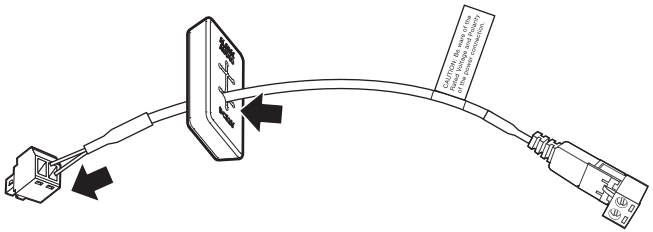


5. Connect the power terminal block to the power port (DC 12 V) of the camera body.

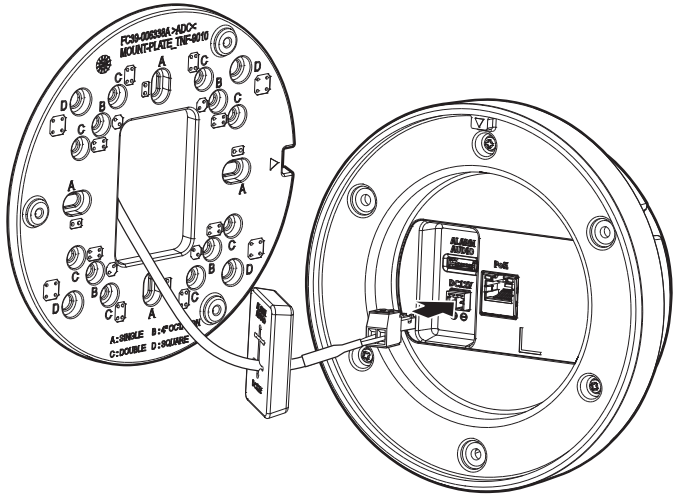


6. After connecting the power cable, attach the connector cover again.

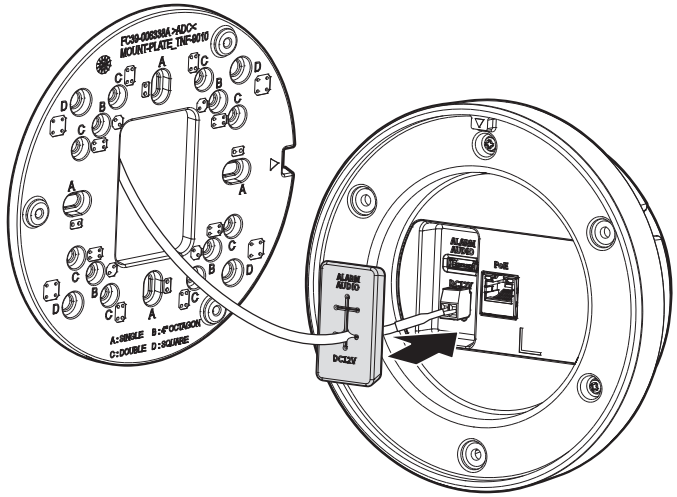

**[Installing audio/alarm cables]**

**7.** Pass the audio/alarm cable through the connector cover as shown in the figure.

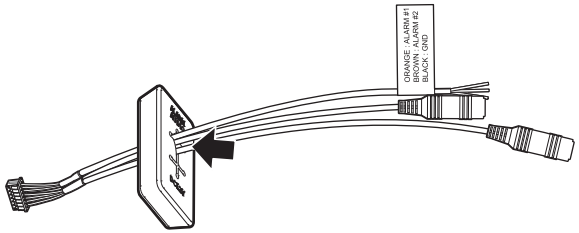


**8.** Connect the connector of the audio/alarm cable to the Audio/Alarm cable port.

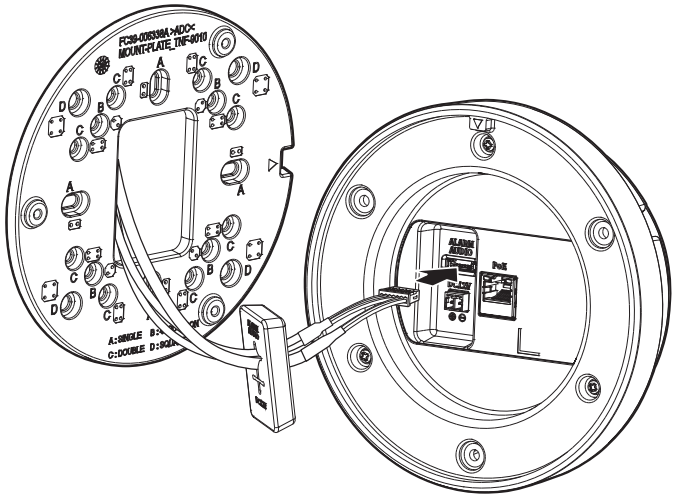


**9.** After connecting the audio/alarm cable, attach the connector cover again.

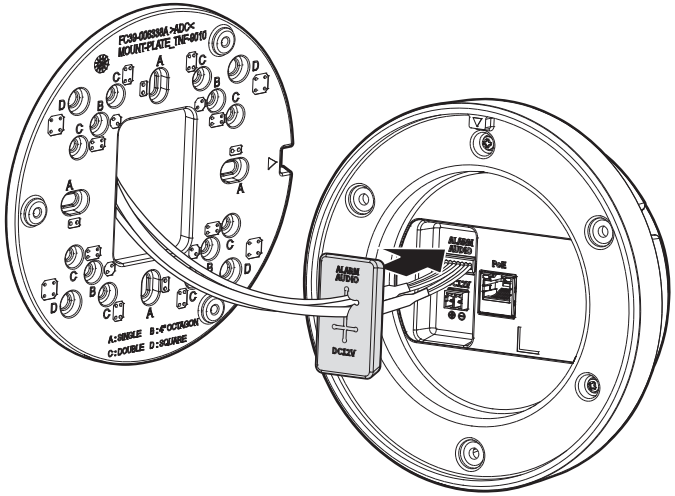


**10.** Use the provided machine screws to join the camera body to the mount plate.

- Align the installation direction guides of the camera body and mount plate and join them.

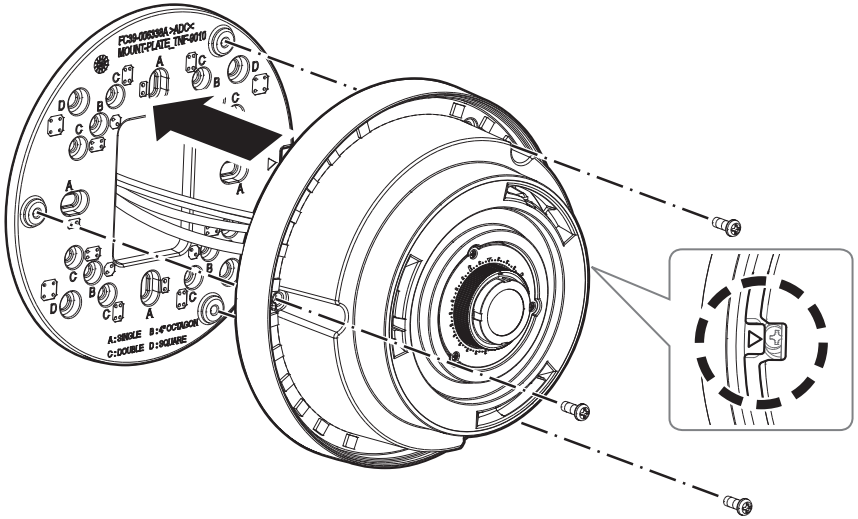

11. Adjust the lens to the desired direction with reference to "**Adjusting the monitoring direction for the camera**" section. (page 15)
12. Push the top cover on to the camera body with the installation direction guides aligned, and turn it in the direction of the arrow to join it.

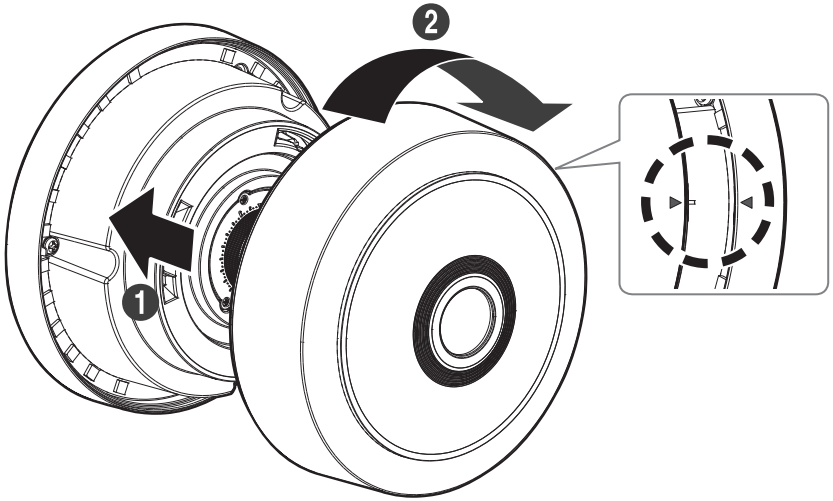


## Adjusting the monitoring direction for the camera

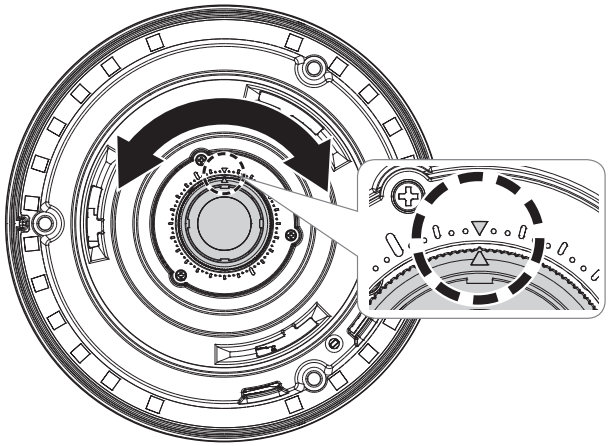

### ▪ Adjusting the monitoring direction

You can adjust the camera direction only when the camera is fixed on the ceiling.
Where, Turning the lens on its axis is called Rotation.

- The effective range of rotation is a total of ±180 degrees.

### ▪ Methods of adjustment

To adjust the camera direction, grab the lens holder and turn it while looking at the direction display.

▪ To adjust the camera monitoring direction, grab the lens holder and turn it.
If you grab the lens to adjust the direction, the focus could be out or fingerprints could remain on the surface.

## CONNECTING WITH OTHER DEVICE

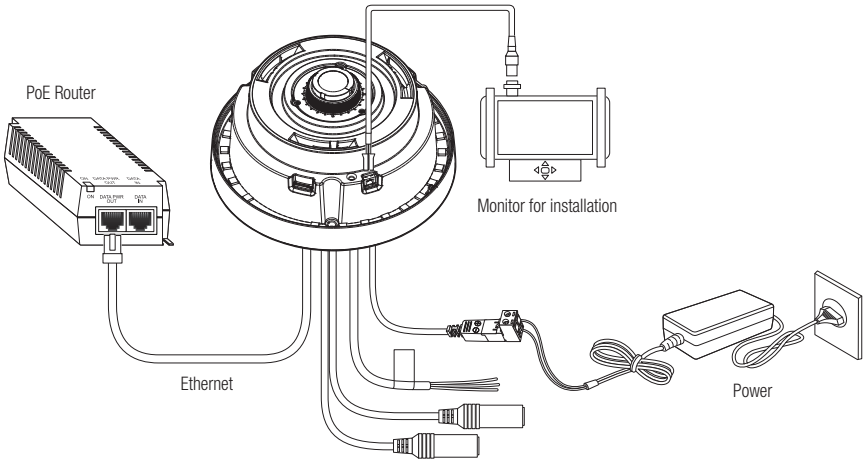


- The Test Monitor Out port of the product is provided for easier installation, and is not recommended for monitoring purposes.

### Ethernet Connection

Connect the Ethernet cable to the local network or to the Internet.

### Powering and networking

Connect the PoE device with the PoE port of the camera.

- Connect and use a PoE enabled router.
- Use a PoE device that complies with the IEEE 802.3af standard.
- If you connect using an PoE enabled router, you don't need a separate power supply cable to power it on.

### Power Supply

Use a screwdriver to connect the + and - lines of the power adaptor to the provided power terminal block, and then insert them in the power port (DC12V).

- You must connect the power terminal block connected with a DC12V power cable to the power port of the camera before plugging the power plug into the power socket.
- If the power sources for PoE and DC 12 V are simultaneously turned on, the device power will be supplied by both of PoE and DC 12 V.
  - It is advisable to use only one power source from PoE and DC 12V.
- Be careful not to reverse the polarity when you connect the power cable.
- If you want to connect an external device, you must turn off the external device before proceeding.

### Power Cable Specification

**In case of DC 12V Input:**

| Wire Type (AWG) | #22 | #20 | #18 |
|---|---|---|---|
| Cable Length (Max.) | 10m | 16m | 25m |

### Network Cable Specification

| Item | Contents | Remark |
|---|---|---|
| Connector | RJ45 (10/100BASE-T) | |
| Ethernet | 10/100BASE-T | |
| Cable | Category 5e | |
| Max Distance | 100 m | DC Resistance ≤ 0.125 Ω/m |
| PoE Support | IEEE 802.3af | |

## Connecting to Audio Input/Output

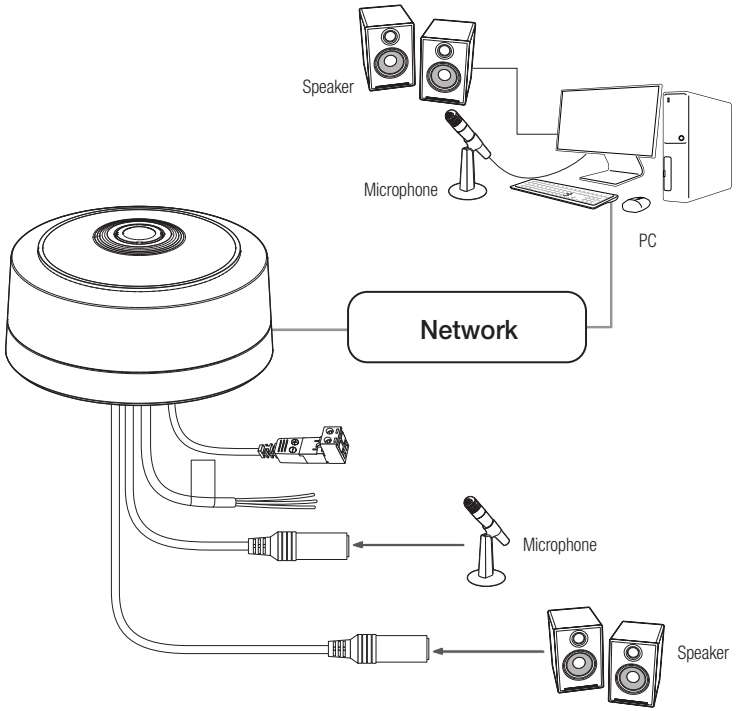


1. Connect the MIC port of the camera with the microphone or LINE OUT port of the amplifier that the microphone is connected to.
2. Connect the SPEAKER port of the camera with the speaker or LINE IN port of the amplifier that the speaker is connected to.
3. Check the specifications for audio input.

- **Audio Codec**
  - Audio In : G.711 PCM (Bit Rate: 64kbps / Sampling Frequency: 8kHz), G.726 ADPCM (Bit Rate: 16Kbps, 24Kbps, 32Kbps, 40Kbps / Sampling Frequency: 8kHz), AAC (Bit Rate: 48Kbps / Sampling Frequency: 16kHz)
- **Full duplex Audio**
- **Audio in** : Selectable (microphone/Line-in), Supported voltage: 2.5VDC (4mA), Input impedance: 2K Ohm
- **Audio out** : Line-out (3.5mm mono jack), Maximum output: 1Vms, Line out impedance : 600Ω

## Connecting to the I/O port box

Connect the Alarm I/O cable to the corresponding port of the port box.

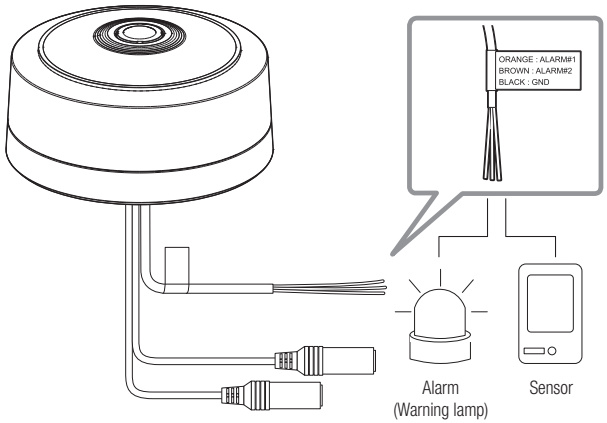


- ALARM #1, ALARM #2 : These ports can be used as alarm input or output ports. If used as input ports, alarm input or day/night sensors can be connect to them. If used as output ports, alarm output signals can be connect to them.
  ※ Alarm I/O changes can be made through the Webviewer setup.
- GND : Common port for alarm in/output signal.



- If devices (e.g., flashing light and siren) that exceed the voltage and current specifications are connected by using the open collector method, it may cause malfunction.
  Refer to the "**Alarm Out Wiring Diagram**" when connecting devices that exceed the voltage and current specifications. (Page 18)

## To connect the external sensor

Connect one of the 2 signal lines to the [ALARM #1] port (if you want this to be the input port) and the remaining one to the [GND] port.

### Alarm In Wiring Diagram

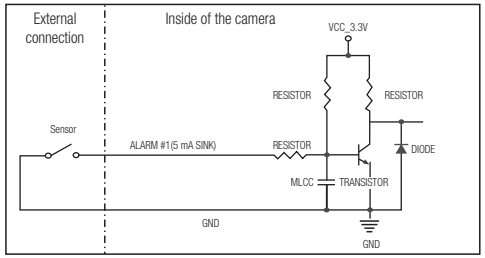


## To connect the alarm out

If devices (e.g., flashing light and siren) that exceed the voltage and current specifications are connected by using the open collector method, it may cause malfunction.

Refer to the alarm out connection diagram below when connecting devices that exceed the voltage and current specifications.

### Alarm Out Wiring Diagram

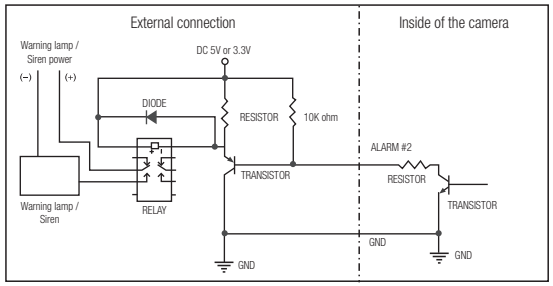


<if you want ALARM#2 to be the output port>

You can set up the network settings according to your network configurations.

## CONNECTING THE CAMERA DIRECTLY TO LOCAL AREA NETWORKING

### Connecting to the camera from a local PC in the LAN

1. Launch an Internet browser on the local PC.
2. Enter the IP address of the camera in the address bar of the browser.

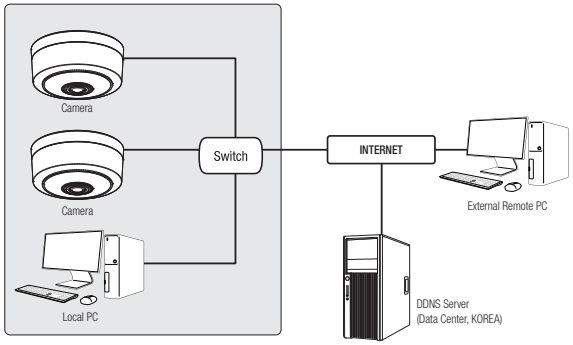


<Local Network>

- A remote PC in an external Internet out of the LAN network may not be able to connect to the camera installed in the intranet if the port-forwarding is not properly set or a firewall is set.
  In this case, to resolve the problem, contact your network administrator.
- By factory default, the IP address will be assigned from the DHCP server automatically.
  If there is no DHCP server available, the IP address will be set to 192.168.1.100.
  To change the IP address, use the Device Manager.
  For further details on Device Manager use, refer to "**Using Device Manager**". (Page 20)

## CONNECTING THE CAMERA DIRECTLY TO A DHCP BASED DSL/CABLE MODEM

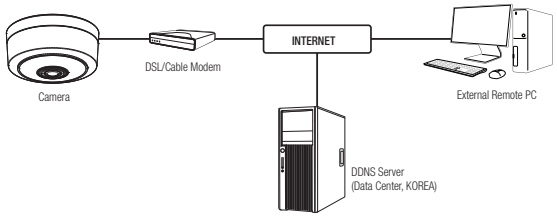


1. Connect the user PC directly with the network camera.
2. Run the Device Manager and change the IP address of the camera so that you can use the web browser on your desktop to connect to the camera.
3. Use the Internet browser to connect to the web viewer.
4. Move to [**Setup**] page.
5. Move to [**Network**] – [**DDNS**] and configure the DDNS settings.
6. Move to [**Basic**] – [**IP & Port**], and set the IP type to [**DHCP**].
7. Connect the camera, which was removed from your PC, directly to the modem.
8. Restart the camera.

- For information on how to set DDNS, refer to the online help of Web Viewer.
- For information on how to set the IP format, refer to the online help of Web Viewer.

## USING DEVICE MANAGER

- Device manager program can be downloaded from <**Support**>-<**Online Tool**> menu at Hanwha Vision website (https://www.HanwhaVision.com).
- More instructions of Device Manager can be found at <**Help**> menu of the main page.

## AUTOMATICALLY SEARCHING CAMERA

If a camera is connected to the same network of the PC where device manager is installed, you can find network camera by using search function.

1. Click <**Search**> at the main page of device manager.
2. Check the camera from the list.
   - Check MAC address at the sticker attached to the camera.

## CONFIGURING IP ADDRESS

If you want to change camera network setting, <**Login OK**> sign must be displayed at <**Status**>. Click <**Authentication**> at the main page to log in.

### Configuring Static IP

Manually insert and configure IP address & port information.

1. Click the camera from the list that you want the change the IP setting.
2. Click <**IP Assign**> at the main page of device manager.
3. Select <**Assign the following IP address**>.
   - IP information of the camera will be displayed as previously set.
4. Fill in IP & Port related categories.

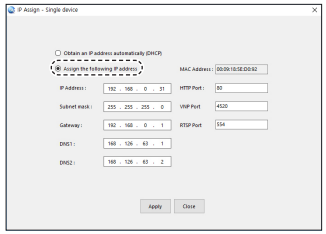


#### If not using a Broadband Router

For setting <**IP Address**>, <**Subnet Mask**>, and <**Gateway**>, contact your network administrator.

- HTTP Port : Used to access the camera using the Internet browser, defaulted to 80.
- RTSP Port: A port that controls real-time streaming. The initial value is 554.

#### If using a Broadband Router

- IP Address : Enter an address falling in the IP range provided by the Broadband Router.
  ex) 192.168.1.2~254, 192.168.0.2~254,
  192.168.XXX.2~254
- Subnet Mask : The <**Subnet Mask**> of the Broadband Router will be the <**Subnet Mask**> of the camera.
- Gateway : The <**Local IP Address**> of the Broadband Router will be the <**Gateway**> of the camera.

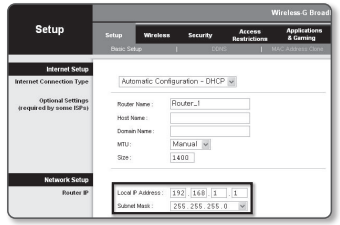

- The settings may differ depending on the connected Broadband Router model.
  For more information, refer to the user manual of the applicable router.
- For more information about port forwarding of the broadband router, refer to "**Port Range Forward (Port Mapping) Setup**". (Page 22)

#### If the Broadband Router has more than one camera connected

Configure the IP related settings and the Port related settings distinctly with each other.

ex)

| Category | | Camera #1 | Camera #2 |
|---|---|---|---|
| **IP related settings** | IP Address<br>Subnet Mask<br>Gateway | 192.168.1.100<br>255.255.255.0<br>192.168.1.1 | 192.168.1.101<br>255.255.255.0<br>192.168.1.1 |
| **Port related settings** | HTTP Port<br>RTSP Port | 8080<br>554 | 8081<br>555 |



- If the <**HTTP Port**> is set other than 80, you must provide the <**Port**> number in the address bar of the Internet browser before you can access the camera.
  ex) http://IP address : HTTP Port
  http://192.168.1.100:8080

5. Click [**Apply**] Button.
6. If the success message is displayed, click [**OK**].

### Configuring Dynamic IP

Receive IP address from DHCP

- Example of the Dynamic IP environment
  - If a Broadband Router, with cameras connected, is assigned an IP address by the DHCP server
  - If connecting the camera directly to modem using the DHCP protocols
  - If IPs are assigned by the internal DHCP server via the LAN

1. Click the camera from the list that you want to change the IP setting.
2. Click <**IP Assign**> at the main page of device manager.
3. Select <**Obtain an IP address automatically (DHCP)**>.
4. Click [**Apply**] button.
5. If the success message is displayed, click [**OK**].

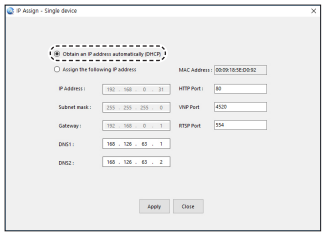


## MANUALLY REGISTERING CAMERA

If the camera cannot be found using search function, the camera can be registered remotely by manually inserting IP information, if the camera is connected to external network.

1. Click <**Add Devices**> - <**Manually Add Device**> at the main page of device manager.
2. Insert the range of IP address that you search.
3. Select the <**Model Name**> of the camera that you register, and insert HTTP port, ID, and password.
4. Click [**Register**] button.
5. Check if camera is registered.
   - Check MAC address at the sticker attached to the camera.

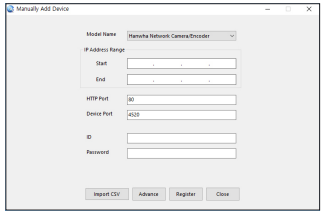


## AUTOMATICALLY CONFIGURING IP

1. Click the camera from the list that you want to automatically configure the IP.
2. Click < **+** > at the main page of device manager.
   - Equipment Setting menu appears.
3. At the menu, click <**Auto IP Configure**>.
4. Click [**Close**] button.

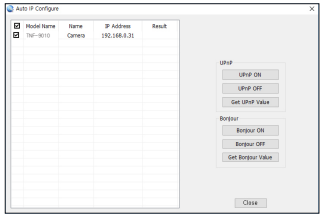

## PORT RANGE FORWARD (PORT MAPPING) SETUP

If you have installed a Broadband Router with a camera connected, you must set the port range forwarding on the Broadband Router so that a remote PC can access the camera in it.

### Manual Port Range Forwarding

1. From the Setup menu of the Broadband Router, select <**Applications & Gaming**> - <**Port Range Forward**>.
   For setting the port range forward for a third-party Broadband Router, refer to the user guide of that Broadband Router.
2. Select <**TCP**> and <**UDP Port**> for each connected camera to the Broadband Router.
   The number of each port to be configured to the IP router should be set according to the port number designated in <**Setup**> - <**Basic**> - <**IP & Port**> on the camera web viewer.
3. When done, click [**Save Settings**].
   Your settings will be saved.

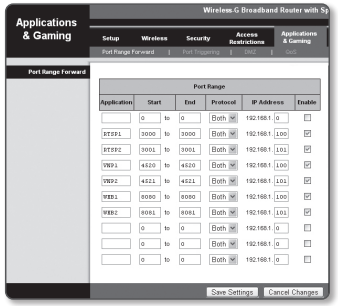


- Port forwarding setting is an example of setting CISCO IP router.
- The settings may differ depending on the connected Broadband Router model.
  For more information, refer to the user manual of the applicable router.

### Setting up Port Range Forward for several network cameras

- You can set a rule of Port Forwarding on the Broadband Router device through its configuration web page.
- A user can change each port using the camera setting screen.

When Camera1 and Camera2 are connected to a router :

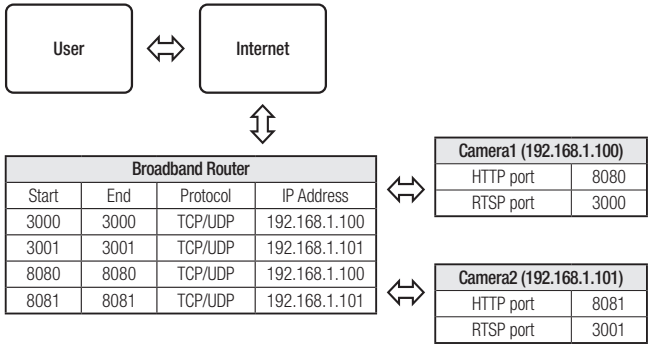


- Port forwarding can be done without additional router setup if the router supports the UPnP (Universal Plug and Play) function. After connecting the network camera, select the checkbox from the menu <**Quick connect**> in <**DDNS**> in "**Settings** -> **Network** -> **DDNS**".

## CONNECTING TO THE CAMERA FROM A SHARED LOCAL PC

1. Run device manager.
   It will scan for connected cameras and display them as a list.
2. Double-click a camera to access.
   The Internet browser starts and connects to the camera.

- Access to the camera can also be gained by typing the camera's IP address in the address bar of the Internet browser.

## CONNECTING TO THE CAMERA FROM A REMOTE PC VIA THE INTERNET

On a remote computer that is not in the Broadband Router's network cluster is not allowed, users can access cameras within a Broadband Router's network by using the camera's DDNS URL.

1. Before you can access a camera in the Broadband Router network, you should have set the port range forward for the Broadband Router.
2. From the remote PC, launch the Internet browser and type the DDNS URL address of the camera, or the IP address of the Broadband Router in the address bar.
   ex) http://ddns.hanwha-security.com/ID

- To use DDNS, sign up at the DDNS homepage (http://ddns.hanwha-security.com) and register the product at [**My DDNS**]> [**Register Product**].

## CONNECTING TO THE CAMERA

### Normally, you would

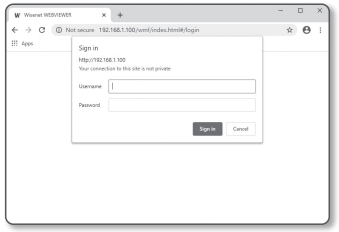


1. Launch the Internet browser.
2. Type the IP address of the camera in the address bar.
   ex) • IP address (IPv4) : 192.168.1.100 ➞ http://192.168.1.100
   - the Login dialog should appear.
   • IP address (IPv6) : 2001:230:abcd: ffff:0000:0000:ffff:1111 ➞ http://[2001:230:abcd:ffff:0000:0000:ffff:1111] - the Login dialog should appear.

### If the HTTP port is other than 80

1. Launch the Internet browser.
2. Type the IP address and HTTP port number of the camera in the address bar.
   ex) IP address : 192.168.1.100:HTTP Port number(8080)
   ➞ http://192.168.1.100:8080 - the Login dialog should appear.

### Using URL

1. Launch the Internet browser.
2. Type the DDNS URL of the camera in the address bar.
   ex) URL address : http://ddns.hanwha-security.com/ID
   - the Login dialog should appear.

■ Network connection is disabled in the LAN only environment.

### Connecting via UPnP

1. Run the client or operating system in support of the UPnP protocol.
2. Click the camera name for search.
   In the Windows operating system, click the camera name searched from the network menu.
   - The login window is displayed.

### Connecting via Bonjour

1. Run the client or operating system in support of the Bonjour protocol.
2. Click the camera name for search.
   In the Mac operating system, click the camera name searched from the Bonjour tab of Safari.
   - The login window is displayed.

### To check the DDNS address

If the camera is connected directly to the DHCP cable modem, DSL modem, the IP address of your network will be changed each time you try to connect to the ISP (Internet Service Provider) server.
If this is the case, you will not be informed of the IP address changed by DDNS.

Once you register a dynamic IP-based device with the DDNS server, you can easily check the changed IP when you try to access the device.
To register your device to the <**DDNS**> server, visit http://ddns.hanwha-security.com and register your device first, and then set the Web Viewer's <**Network**> - <**DDNS**> to <**DDNS**>, as well as providing <**Product ID**> that had been used for DDNS registration.

## PASSWORD SETTING

When you access the product for the first time, you must register the login password.

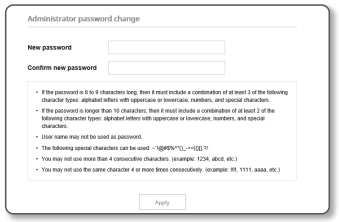


- For a new password with 8 to 9 digits, you must use at least 3 of the following: uppercase/lowercase letters, numbers and special characters. For a password with 10 to 15 digits, you must use at least 2 types of those mentioned.
  - Special characters that are allowed. : ~`!@#$%^*()_-+=|{}[].?/
- For higher security, you are not recommended to repeat the same characters or consecutive keyboard inputs for your passwords.
- If you lost your password, you can press the [**RESET**] button to initialize the product. So, don't lose your password by using a memo pad or memorizing it.

## LOGIN

Whenever you access the camera, the login window appears.
Enter the User ID and password to access the camera.

1. Enter "**admin**" in the <**User name**> input box.
   The administrator ID, "**admin**", is fixed and can not be changed.
2. Enter the password in the <**Password**> input field.
3. Click [**Sign in**].
   If you have logged in successfully, you will the Live Viewer screen.

- When you access the camera web viewer, pay special attention to the security by checking whether the image data is encrypted.

- You will experience the best video quality if the screen size is 100%. Reducing the ratio may cut the image on the borders.

## CAMERA WEB VIEWER SETUP

1. Click the [**Setup ( ⚙ )**] icon.
2. The Settings window appears.
3. You can configure settings for the camera's basic information, video, audio, network, event, analysis, and system over the network.
4. Click <**Help ( ? )**> to view detailed descriptions of each function.

## TROUBLESHOOTING

| PROBLEM | SOLUTION |
|---|---|
| When an Windows 10 user accesses the web viewer through Chrome or Firefox, the sound volume of microphone changes periodically. | • This is what happens when microphone driver has been set to Realtek driver.<br>Install the High Definition Audio device (Windows Default Driver) or the third party driver as the microphone driver. |
| What are the specifications for WAVE files necessary to play audio at the time of an event? | • Sampling rate of 48,000 KHz or less is recommended.<br>• For bits per sample (bps), up to 8/16 bit is recommended.<br>• Only PCM encoding format is supported. |
| No video is displayed when accessing the plug-in free webviewer on Safari via HTTPS. | • On the authentication popup window prompted when initially accessing https, click "View Authentication Certificate" and select the "Always trust when connecting to the designated webviewer IP" check box.<br>• If the webviewer continues failing to display a video after you select "Next" on the message window below, press the command key + Q to exit the Safari browser, access again and follow the procedures stated above. |
| I can't access the camera from a web browser. | • Check to make sure that the camera's Network settings are appropriate.<br>• Check to make sure that all network cables have been connected properly.<br>• If connected using DHCP, verify that the camera is able to acquire dynamic IP addresses without any problem.<br>• If the camera is connected to a Broadband Router, verify that port forwarding is properly configured. |
| Viewer got disconnected during monitoring. | • Connected Viewers become disconnected upon any change to camera or network configurations.<br>• Check all network connections. |
| The camera connected to the network is not detected in the Device Manager program. | • Turn off the firewall settings on your PC and then search the camera again. |
| Images overlap. | • Check whether two or more cameras are set to a single multicast address instead of different addresses. If a single address is used for multiple cameras, the images may overlap. |

| PROBLEM | SOLUTION |
|---|---|
| No image appears. | • If the transmission method is set to multicast, check whether there is a router that supports multicast in the LAN the camera is connected to. |
| Voice is not recorded even though audio input settings are configured. | • You must enable the <Audio In> check box in <Basic> - <Video Profile>. |
| <Motion detection> of <Analytics> is set to <Enable>, but no notification e-mail reaches me even when an analysis event had occurred. | • Verify the settings in the following sequence:<br>A. Check <Data & Time> settings.<br>B. The <Motion detection> should be set to <Enable>.<br>C. Check if the <E-mail> option of <Event setup> menu is checked to use. |
| No signal is found at the Alarm Output port even when an intelligent video analysis event is generated. | • Check alarm output port settings. |
| Cannot record into the Micro SD card. | • Check if the Micro SD card is defective.<br>• When replacing the Micro SD card, it must be done while the power is disconnected from the product. |
| Micro SD card is inserted but the camera does not operate properly. | • Check if the Micro SD card is inserted in the proper direction. Operation of Micro SD card that is formatted by other devices is not guaranteed with this camera unit.<br>• Format the Micro SD card again in <Setup> ➞ <Event> ➞ <Storage> menu. |
| Cannot record in the NAS. | • Confirm that the information registered in the NAS is correct. |
| It reports that NAS setting has failed. | • Confirm that the IP address of the NAS is valid.<br>• Confirm that the ID/password of the NAS is valid.<br>• Confirm that you can access the folder designated as the default folder using the ID of the NAS.<br>• Confirm that the NAS SMB/CIFS items are unchecked.<br>• Confirm that the NAS IP address and the camera IP address are in the same format.<br>ex) The NAS & camera subnet mask initial value is 255.255.255.0.<br>If the IP address is 192.168.20.32 then the NAS IP address should be in the range of 192.168.20.1~192.168.20.255.<br>• Check whether you tried to access as another user without formatting the default folder saved or used.<br>• Confirm that you used recommended NAS equipment. |

Any changes or modifications in construction of this device which are not expressly approved by the party responsible for compliance could void the user's authority to operate the equipment.

This device complies with part 15 of the FCC Rules. Operation is subject to the following two conditions: (1) This device may not cause harmful interference, and (2) this device must accept any interference received, including interference that may cause undesired operation.

This equipment has been tested and found to comply with the limits for a Class A digital device, pursuant to part 15 of the FCC Rules. These limits are designed to provide reasonable protection against harmful interference when the equipment is operated in a commercial environment.
This equipment generates, uses, and can radiate radio frequency energy and, if not installed and used in accordance with the instruction manual, may cause harmful interference to radio communications. Operation of this equipment in a residential area is likely to cause harmful interference in which case the user will be required to correct the interference at his own expense.

eco
RoHS compliant

Hanwha Vision cares for the environment at all product manufacturing stages, and is taking measures to provide customers with more environmentally friendly products.
The Eco mark represents Hanwha Vision's devotion to creating environmentally friendly products, and indicates that the product satisfies the EU RoHS Directive.

**Correct Disposal of This Product (Waste Electrical & Electronic Equipment)**

(Applicable in the European Union and other European countries with separate collection systems)

This marking on the product, accessories or literature indicates that the product and its electronic accessories (e.g. charger, headset, USB cable) should not be disposed of with other household waste at the end of their working life. To prevent possible harm to the environment or human health from uncontrolled waste disposal, please separate these items from other types of waste and recycle them responsibly to promote the sustainable reuse of material resources.
Household users should contact either the retailer where they purchased this product, or their local government office, for details of where and how they can take these items for environmentally safe recycling.
Business users should contact their supplier and check the terms and conditions of the purchase contract. This product and its electronic accessories should not be mixed with other commercial wastes for disposal.

**Correct disposal of batteries in this product**

(Applicable in the European Union and other European countries with separate battery return systems.)

This marking on the battery, manual or packaging indicates that the batteries in this product should not be disposed of with other household waste at the end of their working life. Where marked, the chemical symbols Hg, Cd or Pb indicate that the battery contains mercury, cadmium or lead above the reference levels in EC Directive 2006/66. If batteries are not properly disposed of, these substances can cause harm to human health or the environment.
To protect natural resources and to promote material reuse, please separate batteries from other types of waste and recycle them through your local, free battery return system.

Hanwha
Vision