Hanwha Vision

Network Fisheye

QNF-9010

12MP Fisheye Camera

Key Features

- Max. 3008 x 3008 resolution
- H.265, H.264, MJPEC codec
- Original fisheye view, Single panorama, Double panorama, Quad view
- WDR 120dB, WiseStreamII
- Digital PTZ
- People counting, Heatmap
- Micro SD/SDHC/SDXC 1slot 256 GB, PoE

Compatible Accessories (Optional)

SBP-300LMW

SBP-300WMW1

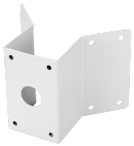

SBP-300KMW

SBP-300BW

SBP-300PMW

SBP-300WMW

SBP-300NBW

SBP-300CMW

Design and specifications are subject to change without notice. The latest product information / specification can be found at HanwhaVision.com
Hanwha Vision is formerly known as Hanwha Techwin.

© Hanwha Vision CO., LTD. All rights reserved.

QNF-9010

12MP Fisheye Camera

Specifications

Video	
Imaging Device	1/2.3" 12M CMOS
Resolution	Overview : 3008x3008, 640x640 Double panorama: 2560x1280, 1920x960, 1280x640, 1024x512, 640x320 Single panorama: 3200x800, 2560x640, 1920x480, 1280x320, 1024x256 Quad view: 2560x1920, 1920x1440, 1280x960, 1024x768, 640x480
Max. Framerate	H.265/H.264: Overview-Max. 30fps/25fps@3008x3008(60Hz/50Hz), Double panorama-Max. 28fps/25fps@2560x1280(60Hz/50Hz) Single panorama-Max. 28fps/25fps@3200x800(60Hz/50Hz) MJPEG: Max. 5fps(60Hz/50Hz)
Min. Illumination	Color: 0.39 Lux (F2.2, 1/30sec)
Video Out	CVBS : 1.0 Vp-p / 75Ω composite, 720x480(N), 720x576(P), for Installation

Lens	
Focal Length (Zoom Ratio)	1.08mm fixed focal
Max. Aperture Ratio	F2.2
Angular Field of View	H: 187° / V: 187° / D: 187°
Min. Object Distance	0.5m(1.64ft)

Operational	
Camera Title	Displayed up to 85 characters
Day & Night	Auto(Electrical)
Backlight Compensation	BLC, WDR, SSDR
Wide Dynamic Range	120dB
Digital Noise Reduction	SSNR V
Motion Detection	4ea, polygonal zones
Privacy Masking	6ea, Rectangle zones
Gain Control	Low / Middle / High
White Balance	ATW / AWC / Manual / Indoor / Outdoor
Electronic Shutter Speed	Minimum / Maximum / Anti flicker (2~1/12,000sec)
Video Rotation	Flip, Mirror
Analytics	Defocus detection, Motion detection, Tampering
Business Intelligence	People counting, Heatmap
Alarm Triggers	Analytics, Network disconnect
Alarm Events	File upload via FTP and e-mail Notification via e-mail SD/SDHC/SDXC or NAS recording at event triggers

Network	
Ethernet	RJ-45(10/100BASE-T)
Video Compression	H.265/H.264: Main/High, MJPEG

Design and specifications are subject to change without notice. The latest product information / specification can be found at HanwhaVision.com
Hanwha Vision is formerly known as Hanwha Techwin.

© Hanwha Vision CO., LTD. All rights reserved.

Smart Codec	Manual(5ea area), WiseStream II
Bitrate Control	H.264/H.265: CBR or VBR MJPEG: VBR
Streaming	Unicast(6 users) / Multicast Multiple streaming(Up to 3 profiles)
Protocol	IPv4, IPv6, TCP/IP, UDP/IP, RTP(UDP), RTP(TCP), RTCP, RTSP, NTP, HTTP, HTTPS, SSL/TLS, DHCP, FTP, SMTP, ICMP, IGMP, SNMPv1/v2c/v3(MIB-2), ARP, DNS, DDNS, QoS, UPnP, Bonjour
Security	HTTPS(SSL) Login Authentication Digest Login Authentication IP Address Filtering User access log 802.1X Authentication(EAP-TLS, EAP-LEAP) Device Certificate(Hanwha Techwin Root CA)
Application Programming Interface	ONVIF Profile S/G/T SUNAPI(HTTP API) Wisenet open platform

General	
Webpage Language	English, French, German, Spanish, Italian, Chinese, Korean, Russian, Japanese, Swedish, Portuguese, Czech, Polish, Turkish, Dutch, Hungarian, Greek
Web Viewer	Supported OS: Windows 7, 8.1, 10, Mac OS X 10.12, 10.13, 10.14 Recommended Browser: Google Chrome Supported Browser : MS Explore11, MS Edge, Mozilla Firefox(Window 64bit only), Apple Safari(Mac OS X only)
Edge Storage	Micro SD/SDHC/SDXC 1slot 256GB
Memory	2048MB RAM, 256MB Flash

Environmental & Electrical	
Operating Temperature / Humidity	-10°C ~ +40°C(+14°F ~ +104°F) / Less than 90% RH
Storage Temperature / Humidity	-50°C ~ +60°C(-58°F ~ +140°F) / Less than 90% RH
Certification	IP42
Input Voltage	PoE(IEEE802.3af, Class3)
Power Consumption	PoE: Max 7.7W, typical 6.4W

Mechanical	
Color / Material	White / Plastic
RAL Code	RAL9003
Product Dimensions / Weight	Ø99x49mm, 370g

DORI (EN62676-4 standard)	
Detect (25PPM/ 8PPF)	34.9m(114.49ft)
Observe (63PPM/ 19PPF)	13.9m(45.60ft)
Recognize (125PPM/ 38PPF)	7.0m(22.96ft)
Identify (250PPM/ 76PPF)	3.5m(11.48ft)

Design and specifications are subject to change without notice. The latest product information / specification can be found at HanwhaVision.com
Hanwha Vision is formerly known as Hanwha Techwin.

© Hanwha Vision CO., LTD. All rights reserved.

QNF-9010

12MP Fisheye Camera

CAD

Unit:mm [inch]

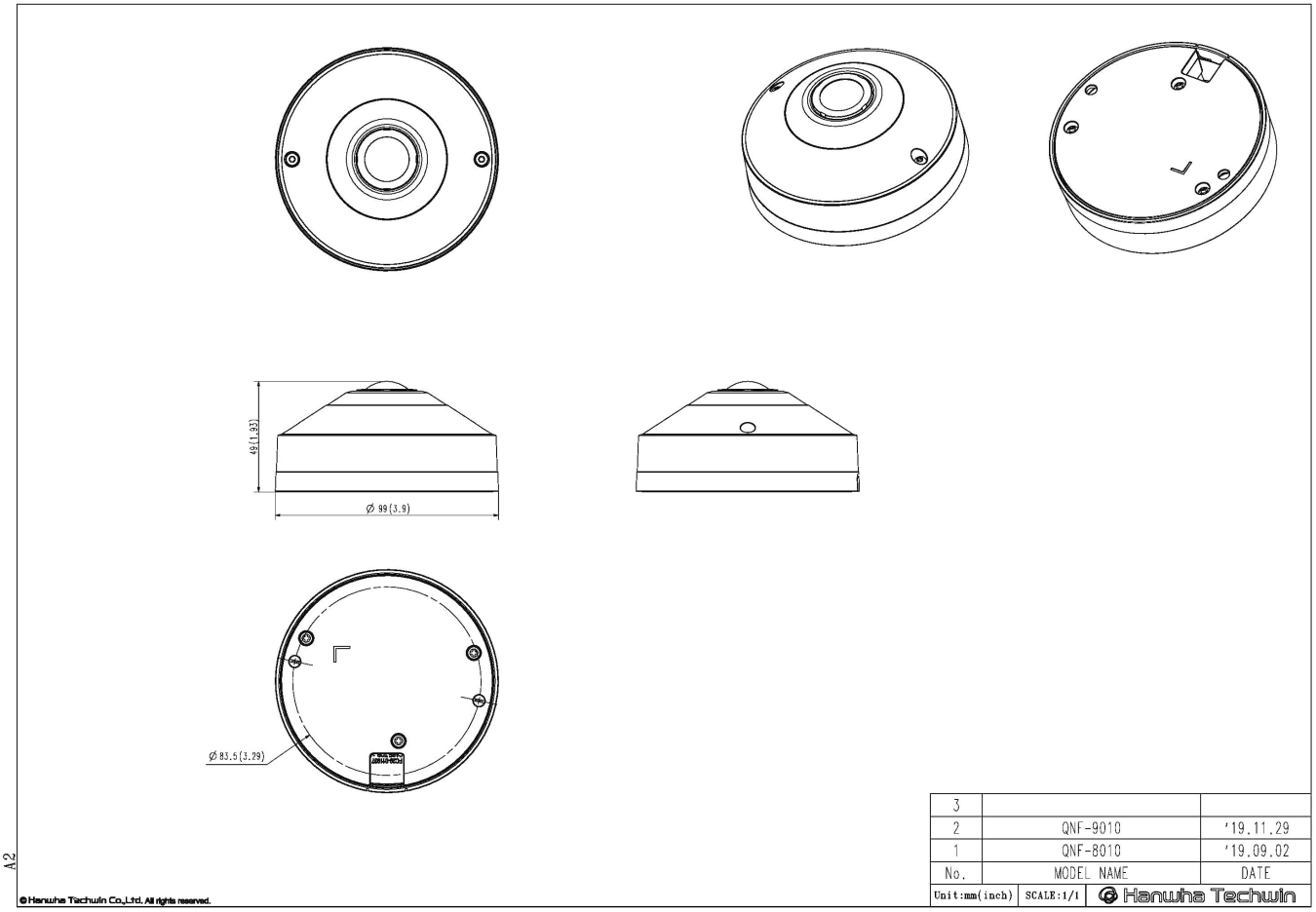

Design and specifications are subject to change without notice. The latest product information / specification can be found at HanwhaVision.com
Hanwha Vision is formerly known as Hanwha Techwin.

© Hanwha Vision CO., LTD. All rights reserved.