TouchControl

TouchControl

TouchControl is a 10", high-resolution touch screen Remote Control Terminal with active maps and zone plans.

It is a fire panel and network node in its own right and works on Advanced's standard and fault tolerant networks. It is compatible with our MxPro and Axis EN fire panels.

Zone information is presented via both the unit's colour coded, easy-to-navigate interface and the active maps that are easily configured using the Dynamix Tools Map App. Using TouchControl's colour-coded, easy-to-navigate interface users can:

- Evacuate/Mute/Silence/Resound & Reset
- View fires/ faults/ disablements/ alarms/ inputs/ outputs/ supervisory and network via ‘instant filters’
- View/enable/disable zones View/enable/disable devices Enable/disable outputs by type
- Enable Walk Test mode Test display/zones/outputs/buzzer and LEDs
- Quickly access all zones in fire/fault/disablement/test via ‘instant filters’ and where allowed change status
- View 1,000 general and 500 Fire event log Set network time and date

Users can choose from five pre-set background images or upload their own. The relevant zone plan to the unit's position can be displayed and users can run presentations on the display, which defaults to normal operation in the event of a fire condition or if the screen is touched. TouchControl enhances public areas and provides new levels of control and oversight.

Features

- 2 Part enclosure for easy first fix and slide-in installation.
- 1280x800 (720p); high resolution screen, designed to work with fireman's glove
- 'At a glance' system status, immediately identify zones and devices in Fire, Test, Supervisory and Fault
- Interactive site maps and zone plans capability built-in
- Monitored external input for external PSU faults
- Two-core connection to the network (fault tolerant or standard)
- Low-profile bezel for flush fitting
- Select from a number of background images or add a customised image
- Low profile installation
- Dedicated status indicators for Fire, Fault, System Fault, Disabled, Test and Power
- Zone plan display, an essential part of BS5839-1
- Dual Power Supply inputs, independently monitored to allow redundant power feeds

Specification

Environment	Indoor, Dry
Supply Voltage	18-30V DC
Supply Current	300mA
FUSE - PCB	T250H1.6A
PSE - Fault Monitoring	EOL 3300Ω, ACT 680Ω
Operating Temperature	-5 ºC to +40 ºC
Relative Humidity	95%
Wire Guage (max.)	2.5mm ^{2}
Dimensions (mm)	H 191 x W 282 x D 80
Knockouts (20mm)	5 Top, 5 Rear
Models	TOUCH-10, TOUCH-10/FT

Order Codes & Options

TOUCH-10	TouchControl for Standard Network
TOUCH-10/FT	TouchControl for Fault Tolerant Network
TOUCH-10-SBB	TouchControl - Surface Back Box

More Information

Enclosure Mounting (Flush Mount)

This unit is designed to be flush mounted into stud walling. Cut out the aperture in the wall to 3mm larger than the size of the back box. Nominal 272x180, (Min 270x178, Max 274x182)

Enclosure Fixing Points

- 4x fixing holes in rear of enclosure or
- 4x fixing slots in side walls

Side wall slots allow adjustment for uneven walls.

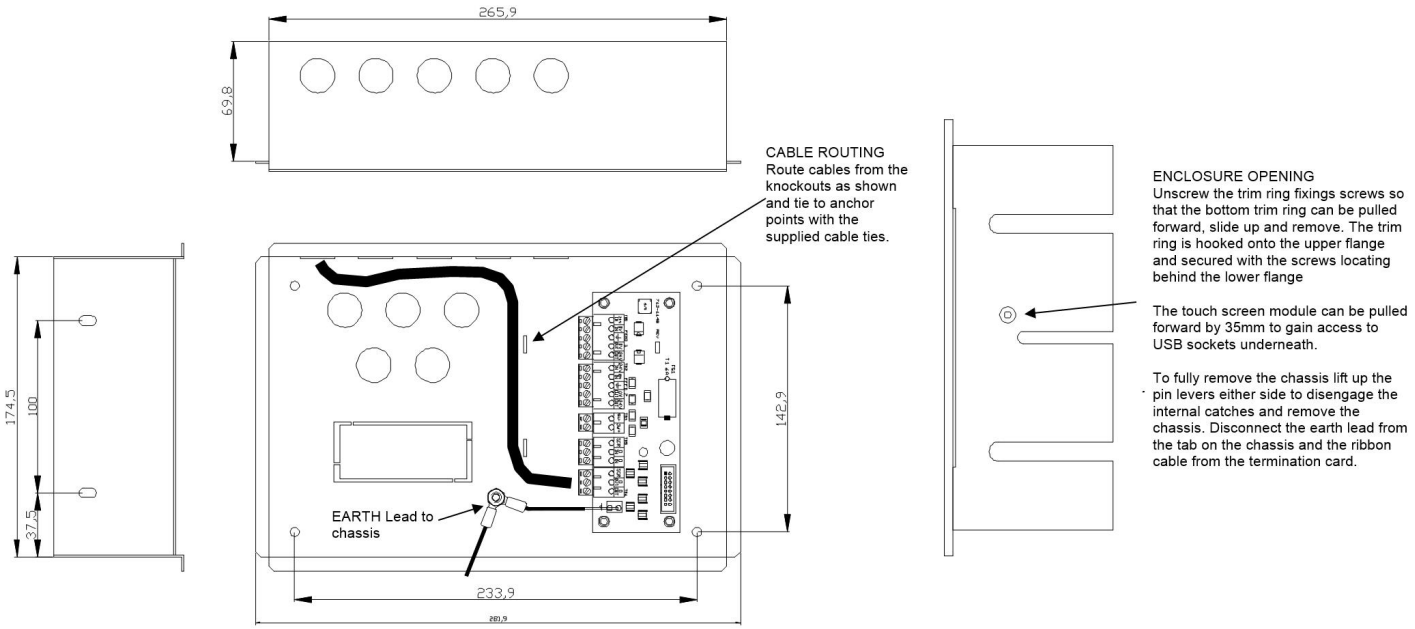

Enclosure Mounting (Surface Mount)

The Touch-10 may also be surface mounted using the TOUCH-10-SBB enclosure (order separately). The enclosure dimensions are shown in the diagram below.

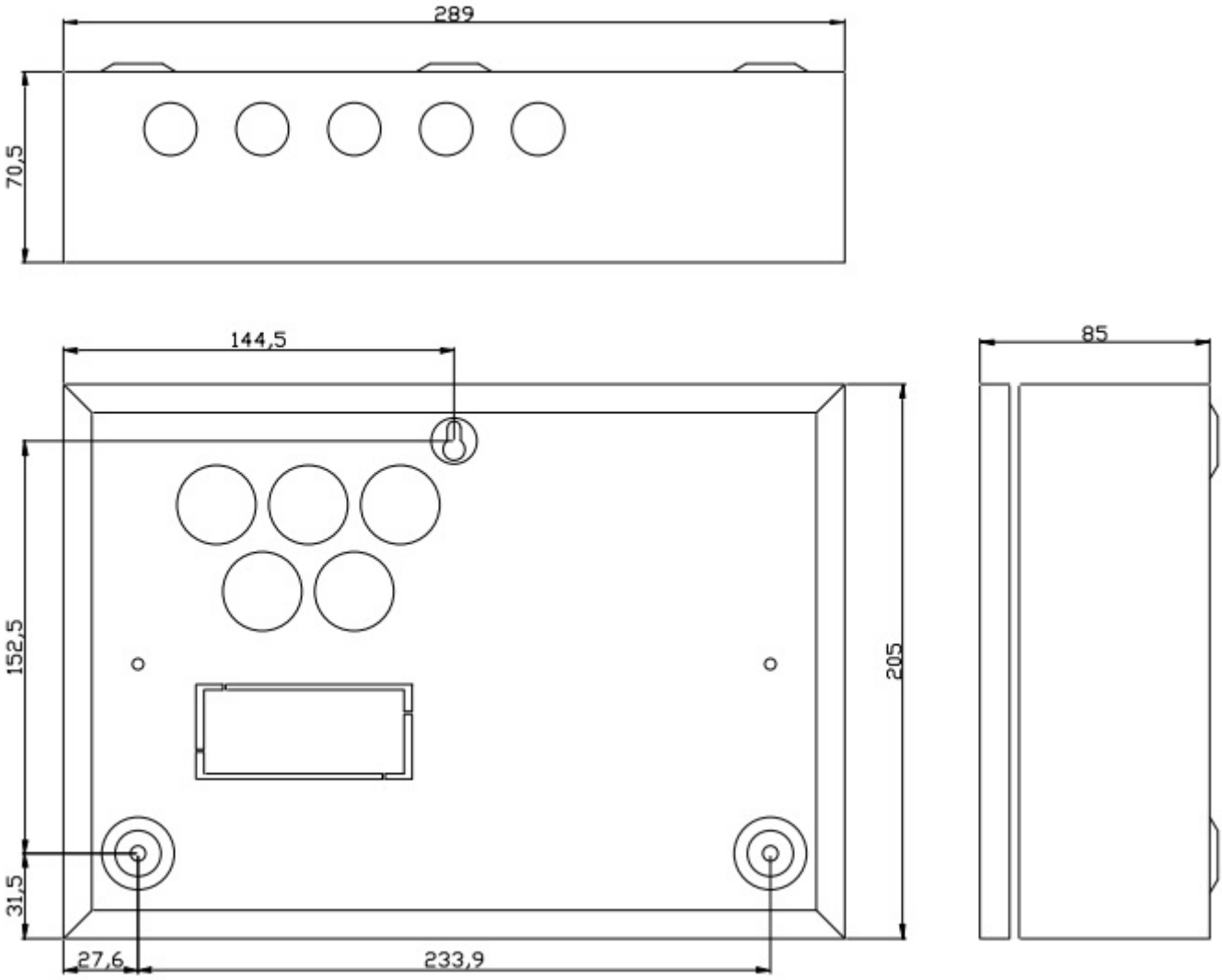

Enclosure Opening

Unscrew the trim ring fixings screws so that the bottom trim ring can be pulled forward, slide up and remove. The trim ring is hooked onto the upper flange and secured with the screws locating behind the lower flange

The touch screen module can be pulled forward by 35mm to gain access to USB sockets underneath.

To fully remove the chassis lift up the pin levers either side to disengage the internal catches and remove the chassis. Disconnect the earth lead from the tab on the chassis and the ribbon cable from the termination card.

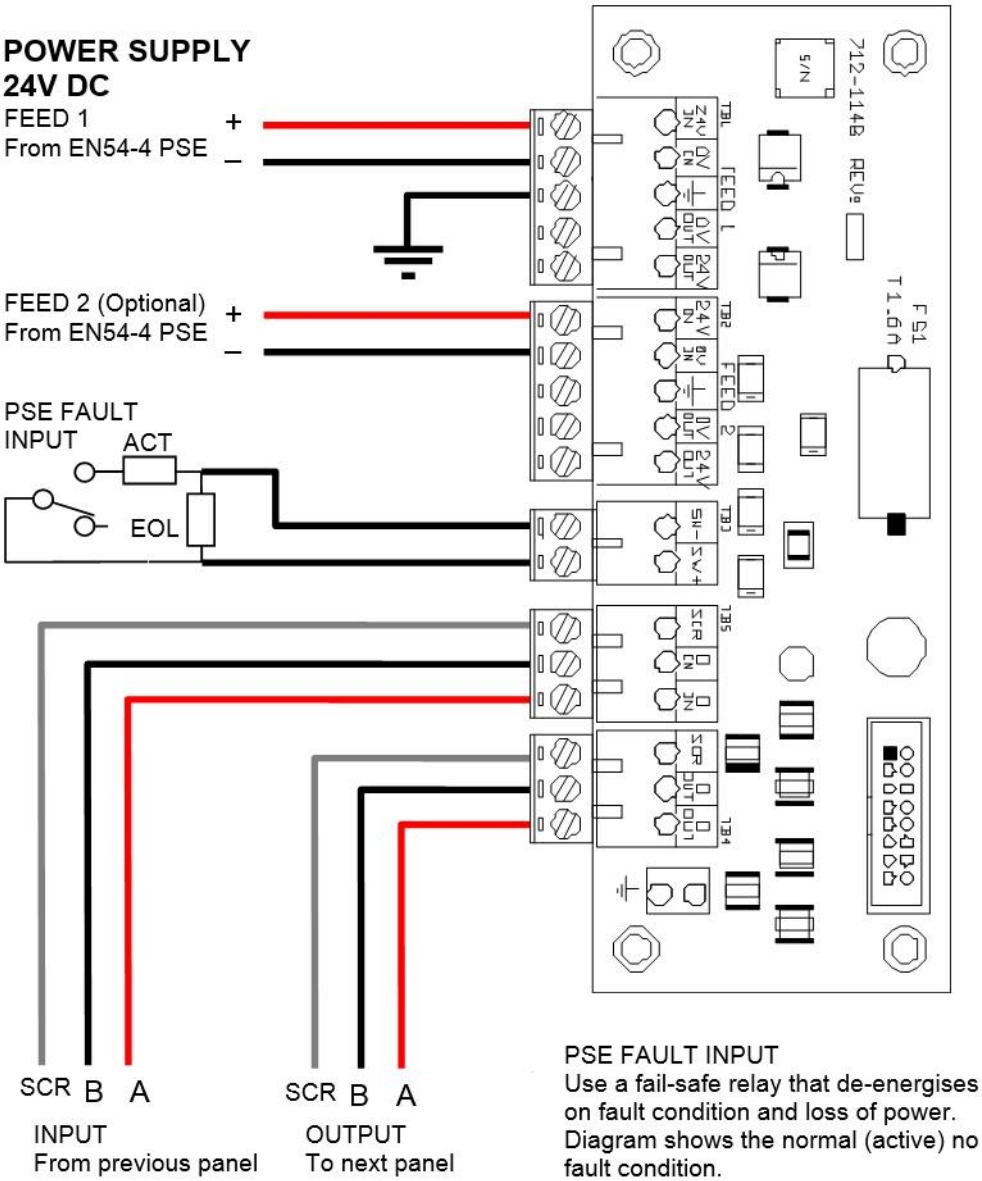

Advanced, The Bridges, Balliol Business Park, Newcastle upon Tyne, NE12 8EW, UK T: +44 (0)345 894 7000, E: enquiries@advancedco.com, W: www.advancedco.com

As our policy is one of constant product improvement the right is therefore reserved to modify product specifications without prior notice.