TECHNICAL DATASHEET

CLAMBELL®
FIRE ALARM BELLS

CLAMBELL

Manufactured by Vimpex in the UK, the ClamBell® EN54-3 approved fire bell incorporates traditional and innovative design.

The hinged design of ClamBell® means installers benefit from reduced installation time. Once fitted to the wall and wired to the circuit, ClamBell® clicks shut.

Low power consumption and good sonorous tone result from use of an aluminium gong which also significantly reduces weight.

Three mounting versions are available - shallow base, deep base and purpose designed weatherproof option.

APPROVALS

LPCB 456d/01

CE 2831

FEATURES

- Permanently fitted gong
- Specifically designed weatherproof back box
- Mounting options for European, Asian and US style installations
- Slick and modern looking
- Fully customised pad printed branding
- Strobell EN-23 VAD option which integrates ClamBell and VAD for unique combined unit will be available soon

STROBELL VARIANT AVAILABLE SOON

*Please contact us for more information on the StroBell product.

PART NUMBERS - BELLS

ClamBell 24 V 6" Fire Alarm Bell

- CBE6-XS-024-EN ClamBell 24 V 6" Fire Alarm Bell - Shallow Base*1
- CBE6-XD-024-EN ClamBell 24 V 6" Fire Alarm Bell - Deep Base*1
- CB6E-XW-024-EN ClamBell 24 V 6"Fire Alarm Bell - Weatherproof*1

ClamBell 12 V 6" Fire Alarm Bell

- CBE6-XS-012-EN ClamBell 12 V 6" Fire Alarm Bell - Shallow Base
- CB6E-XA-012-EN ClamBell 12 V 6" Fire Alarm Bell - Shallow Base/US Install Plate
- CBE6-XD-012-EN ClamBell 12 V 6" Fire Alarm Bell - Deep Base
- CBE6-XW-012-EN ClamBell 12 V 6" Fire Alarm Bell - Weatherproof

ClamBell 230 V 6" Fire Alarm Bell

- CBE6-XD-230-EN ClamBell 230 V 6" Fire Alarm Bell - Deep Base
- CBE6-XW-230-EN ClamBell 230 V 6" Fire Alarm Bell - Weatherproof

ClamBell 120 V 6" Fire Alarm Bell

- CBE6-XD-120-EN ClamBell 110 V 6" Fire Alarm Bell - Deep Base
- CBE6-XW-120-EN ClamBell 110 V 6" Fire Alarm Bell - Weatherproof

*X= Colour. Standard colours are R=Red, White=White and G=Grey

*1 Tested and Approved by LPCB

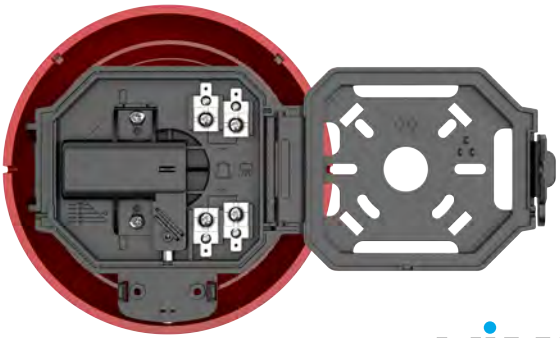

VIMPEX

TECHNICAL DATASHEET

CLAMBELL®
FIRE ALARM BELLS

CLAMBELL

SPECIFICATION

	6" (150 mm) Internal - 24 V dc			6" (150 mm) Internal - 12 V dc			6" (150 mm) Internal - 230 V ac		6" (150 mm) Internal - 120 V ac	
	Shallow Base	Deep Base	W/P Base	Shallow Base	Deep Base	W/P Base	Deep Base	W/P Base	Deep Base	W/P Base
Rated Voltage (V):	20.4 - 27.6			9.6 - 13.2			207 - 253		114 - 126	
Rated Current @24 V (mA):	12			12			TBC			
Starting Voltage (V):	11			5.5			TBC			
Sound Output dB(A) @1 m (max):	96.0			TBC			96.0			
Temperature Range (C°):	-10 - +50	-25 - + 70		-10 - +50	-25 - + 70		-25 - + 70		-25 - + 70	
Humidity Range (%):	≤96 %									
Weight (g):	378 g	497 g	499 g	378 g	497 g	499 g	497 g	499 g	497 g	499 g
Gong Colour:	Red/White/Grey									
Gong Construction:	Aluminium									
IP Rating:	IP21C	IP33C	IP56 Cat2*2	IP21C	IP33C	IP56 Cat2*2	IP33C	IP56 Cat2*2	IP33C	IP56 Cat2*2

*2 Weatherproofing not approved by LPCB, tested by Intertek

***Note: Other gong colours available subject to minimum order quantity. Please contact us for a full list of colours. Customers must specify R= Red, W= White or G= Grey when placing an order.**

INSTALLATION

Shallow Base

Dimensions (mm)

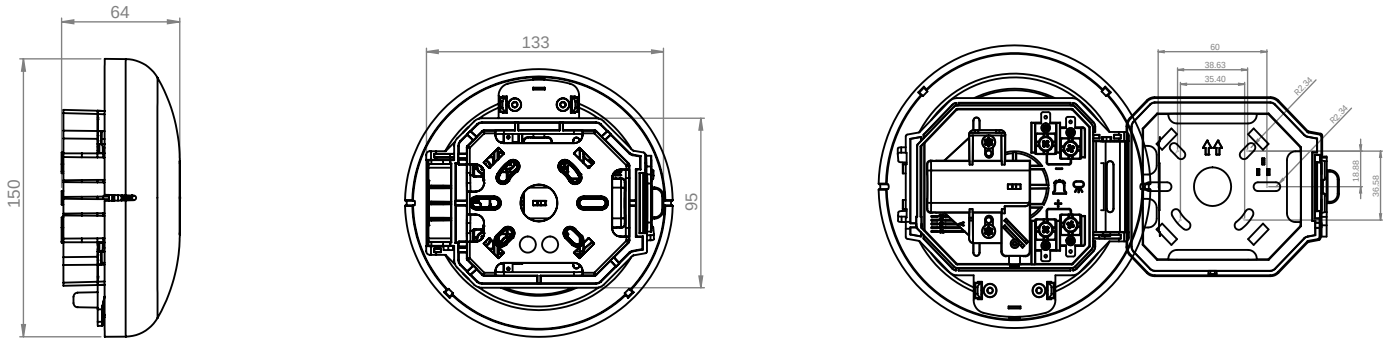

Deep Base

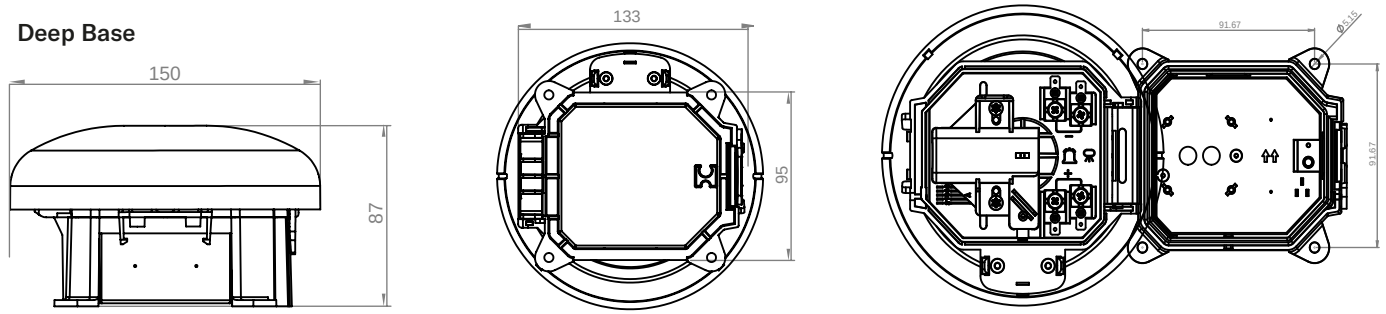

MADE IN THE UK BY VIMPEX

3700142_REV010D

We reserve the right to change or amend any design or specification in line with our policy of continuing development and improvement.

Vimpex LTD
Star Lane, Great Wakering,
Essex SS3 0PJ, UK
t. +44 (0) 1702 216999
e. sales@vimpex.co.uk
www.vimpex.co.uk

Vimpex Interguard AB
Mekanikervägen 6
564 35 Bankeryd, Sverige
t. +46 (0) 36 37 10 65
e. sales@vimpex.se

Fire Industry Association

Quality System Certificate No. 456
Assessed to ISO 9001