# 28028

## ALARM BOX “MINI” 20 POLES

### Technical data

| | |
|---|---|
| Dimensions (L x W x H) mm | 58 x 76 x 27 |
| Cable dimension - LSA slots (mm) | Ø 0,4 - 0,7 |
| Cable dimension - screw terminals | 0,14 - 1 mm2 |
| Input max. load | 60 V / 2 A |
| Tamper switch max. load | 50 mA |
| Anti-tamper protection | Yes |

**Complete junction box for installation of alarm and access systems.**
Anti-tampering protected 16 pairs junction box.
4 pcs 1 Kohm termination resistors is mounted on the terminal block.
The terminal block has 16 parallel connected terminals, of which 1 pair is intended for anti-tamper switch connection. The box is flame-retardant according to UL 94 V-0.
Available in different options, slot (LSA) or screw connection with lift function.

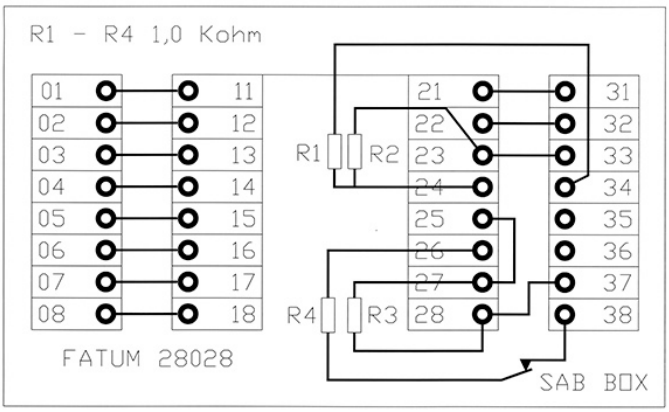


**ORDERING INFORMATION**

| Model | Description |
|---|---|
| 28028.01 | Alarm Box Mini; 16 pairs; 1 Kohm; Tamper Protected; LSA / LSA |
| 28028.03 | Alarm Box Mini; 16 pairs; 1 Kohm; Tamper Protected; Screw / Screw |

## Related products and accessories

| | | |
|---|---|---|
| 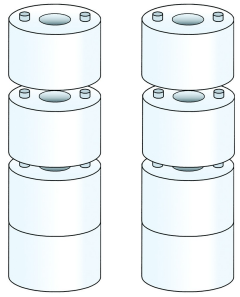 | **2581.06**<br><br>STACKABLE WALL SPACERS FOR EASY WIRING IN BOX | 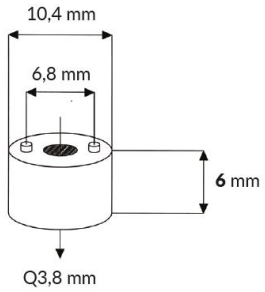 |
| | **3132.01**<br><br>WALL LABEL FOR EASY LABELING | 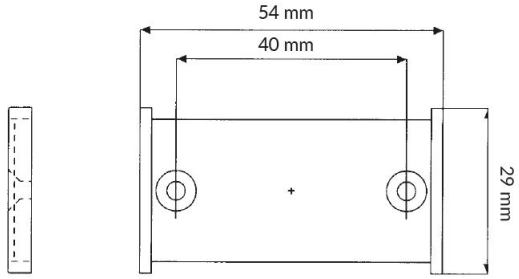 |
| | **0501.01**<br><br>LSA TOOL FOR KRONE LSA PLUS CONTACTS | |
| | **1901.12**<br><br>SPARE SPRINGS TO FATUM-SERIES | |