3041

DISTRIBUTION MODULE 1 > 10 PAIR

Technical data

Cable dimension - LSA slots (mm)	Ø 0,4 - 0,7
Cable dimension - screw terminals	0,14 - 1 mm2
Input max. load	60 V / 2 A
Anti-tamper protection	Yes
Dimensions (L x W)	116 x 40

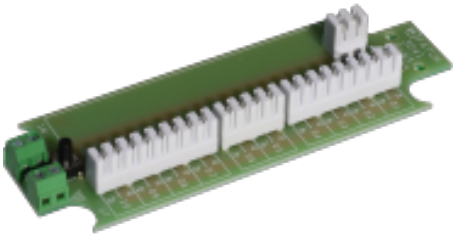

Terminal block for installation of tele and access systems.

Distribution module with 1 > 10 pair.

Distribution module with separate terminals for incoming cable, connected in parallel with separate terminals for outgoing cables.

1 pair in and 10 pairs out.

Available in different options, slot (LSA) or screw connection with lift function.

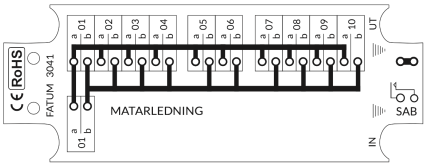

ORDERING INFORMATION

Model	Description
3041.01	Distribution module 1 > 10 pairs, Anti-tamper protection, LSA / LSA
3041.03	Distribution module 1 > 10 pairs, Anti-tamper protection, Screw / Screw

Related products and accessories

	4101 MODULE BOX PLASTIC WITH PLACE FOR 1 TERMINAL BLOCK	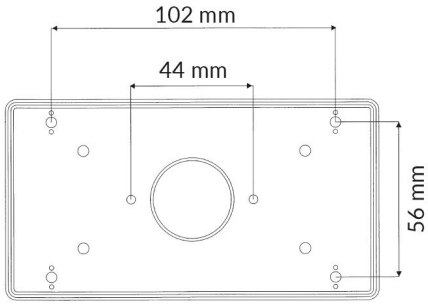
	4103 MODULE BOX PLASTIC WITH PLACE FOR UP TO 3 TERMINAL BLOCKS	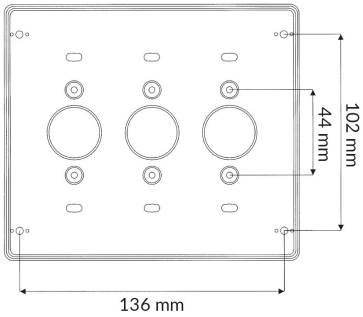
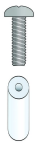	**2591.15** TERMINAL SPACERS FOR MOUNTING OF OUR TERMINAL BLOCKS	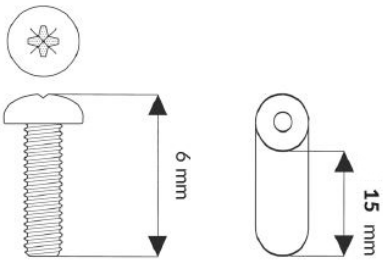
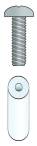	**2591.18** TERMINAL SPACERS FOR MOUNTING OF OUR TERMINAL BLOCKS	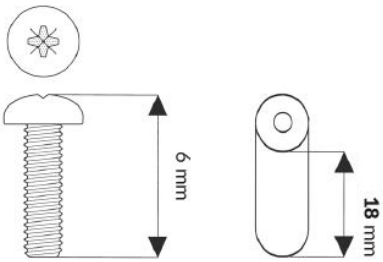
	2596.04 TERMINAL SPACERS AS A COMPLEMENT TO ESMI- AND ERICSSON-BAR	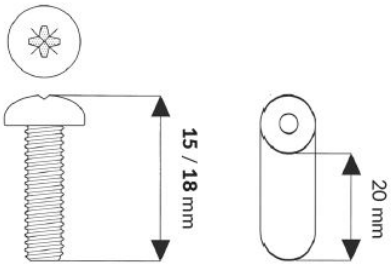

Related products and accessories

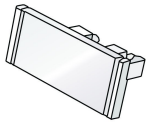	**3131.01** LABEL TERMINAL FOR EASY LABELING OF MODULE BLOCKS	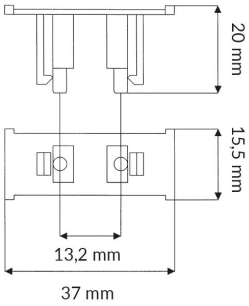
	0501.01 LSA TOOL FOR KRONE LSA PLUS CONTACTS	