MC 240 with built-in resistors

Magnetic contact for recessed mounting, NC, with built-in resistors

Technical data

Installation method	Recessed mounting
Contact function	Normally Closed (NC)
Approvals	EN 50131-2-6 Grade 2, Class IIIA, VdS G 193513 Class B, INCERT B-582-1003, SBSC 9-196, Class 2 , FG, F&P Danmark, NF&A2P
Contact rating	48 VDC / 500 mA / 10 VA
Drill diameter mm	9-10
Magnet type	Alnico 5
Mounting on steel	Only with accessories
Make distance (wood) mm	27
Make distance (steel) mm	Depending from accessories used
Tamper protection	Yes
Connection	Cable
Housing material	Al-alloy
Housing protection class	IP 67
Contact dimensions (L x Ø) mm	37 x 11
Magnet dimensions (L x Ø) mm	37 x 11
Operating temperature	–40 – +70 °C
Grade	2

MC 240 universal magnetic contact with NC function and built-in resistors for a balanced loop that can be used both in alarms and access systems for monitoring e.g. doors, windows, doors and gates against unauthorized opening.

With built-in resistors, a lot of time is saved during installation with fewer connection points in the junction box and thus also fewer sources of error. You can also choose to connect the magnetic contact directly to the central unit and thus no junction box is needed. Choose between having only a parallel resistor across the reed switch or having parallel resistors and series resistors mounted with the reed switch.

Circuit diagram with 1 resistor (in parallel with the reed)

Circuit diagram 2 resistors (S in series and P in parallel with the reed)

ORDERING INFORMATION

Type	Description
MC 240-P1K	Magnetic contact, NC, 1K resistor in parallel with the reed switch, 2m cable
MC 240-P2,2K	Magnetic contact, NC, 2,2K resistor in parallel with the reed switch, 2m cable
MC 240-P3,3K	Magnetic contact, NC, 3,3K resistors in parallel with the reed switch, 2m cable
MC 240-P4,7K	Magnetic contact, NC, 4,7K resistors in parallel with the reed switch, 2m cable
MC 240-P1K0S1K0-6	Magnetic contact, NC, 2x1K resistor in series and parallel with the reed switch, 6m cable
MC 240-P2K2S2K2-6	Magnetic contact, NC, 2x2,2K resistors in series and parallel with the reed switch, 6m cable
MC 240-P3K3S3K3-6	Magnetic contact, NC, 2x3,3K resistors in series and parallel with the reed switch, 6m cable
MC 240-P4K7S4K7-6	Magnetic contact, NC, 2x4,7K resistors in series and parallel with the reed switch, 6m cable
MC 240-P5K6S5K6-6	Magnetic contact, NC, 2x5,6K resistors in series and parallel with the reed switch, 6m cable

Related products and accessories

MC 200-S3

Plastic Housing
for MC 240, 246 and 247

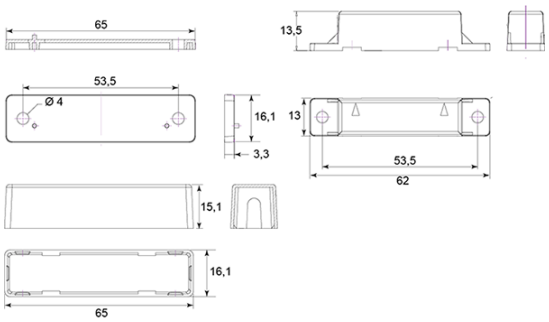

MC 200-S11

Plastic Flange
for MC 240, 246, 247, 250, 255, 270, 272, 275

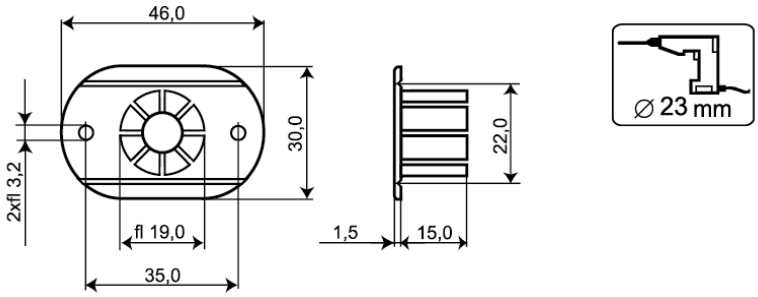

MC 200-S12

Plastic Flange with Strong Magnet
for MC 240, 246, 247 and 255

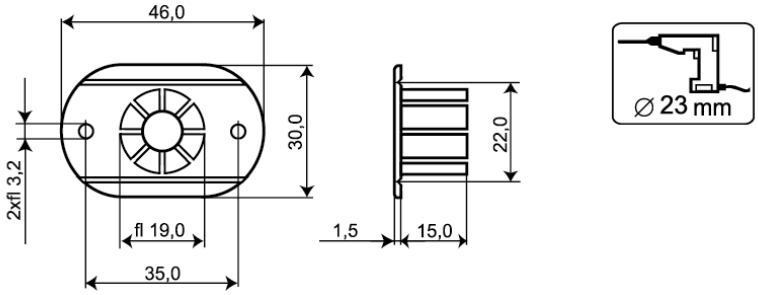

MC 200-S21

Plastic Snap-in Flange
for MC 240, 246, 247, 250, 255, 270, 272, 275

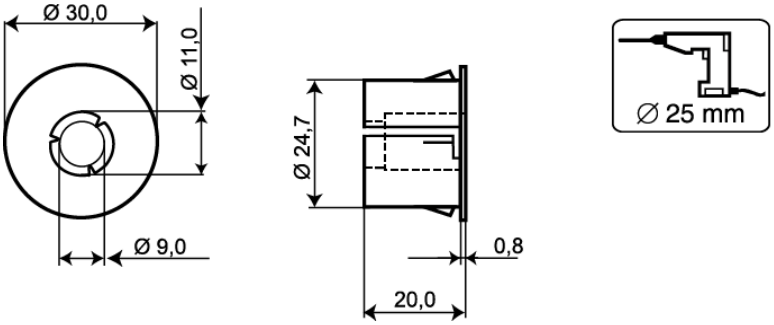

MC 200-S22

Snap-in Flange with Strong Magnet
for MC 240, 246, 247 and 255

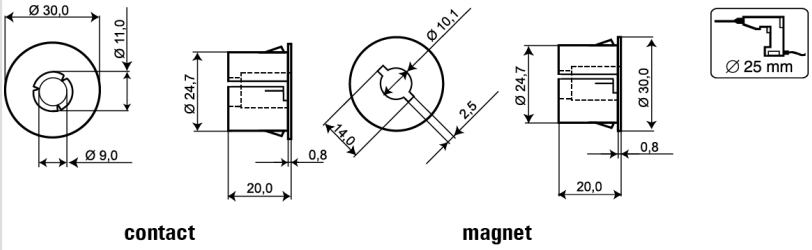

Related products and accessories

MC 200-S31

Plastic Snap-in Flange
for MC 240, 246, 247, 250, 255, 270, 272, 275

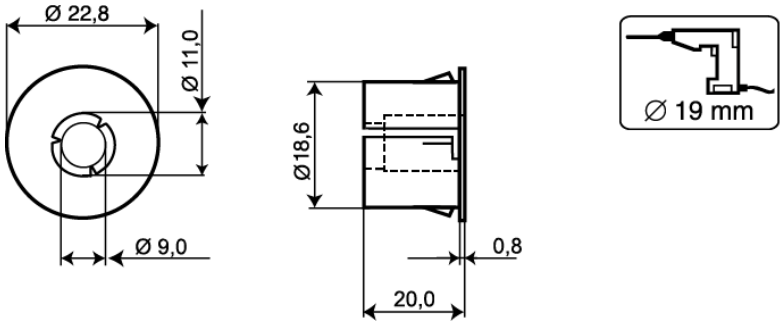

MC 200-S32

Snap-in Flange with Strong Magnet
for MC 240, 246, 247, 255

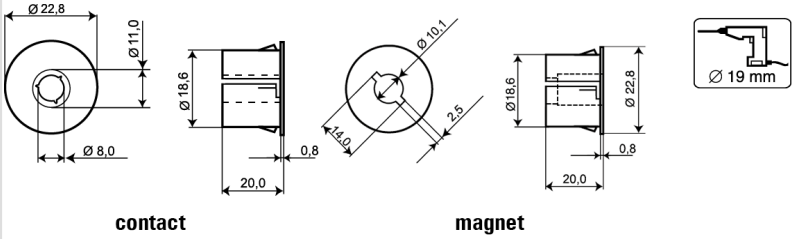

MC 200-4

Aluminium Housing
for MC 240, 246 and 247

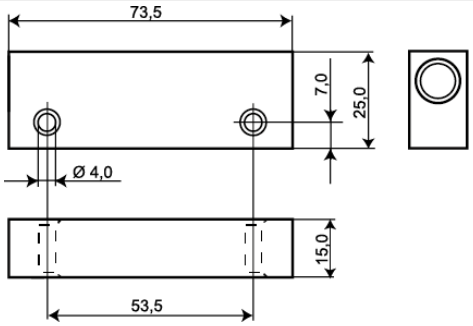

MC 200-5

Aluminium Part with Extra Strong Magnet
for MC 240, 246 and 247

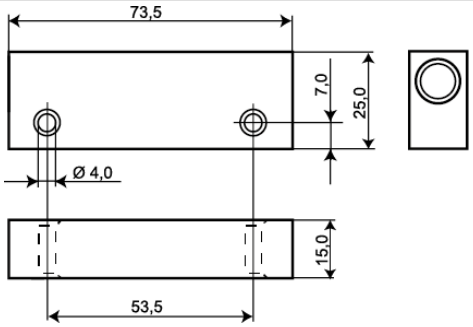

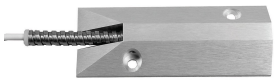

MC 200-6

Aluminium Housing for Floor Installation
for MC 240, 246 and 247

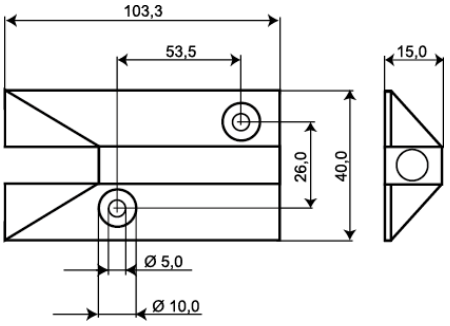

Related products and accessories

	MC 200-7 Aluminium Housing for MC 240, 246 and 247	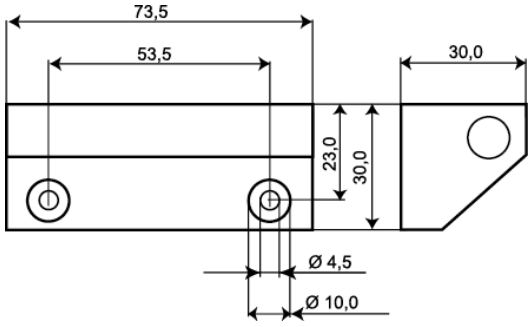
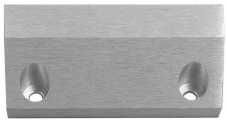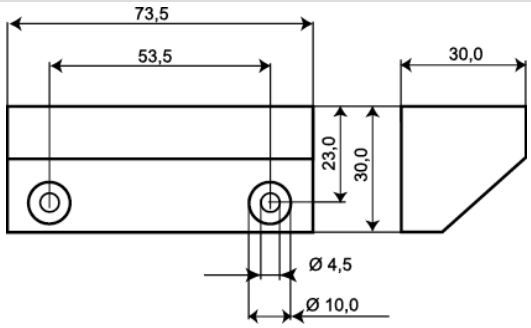	**MC 200-8** Aluminium Part with Extra Strong Magnet for MC 240, 246 and 247