CDVI

Security to Access

ievo

5 YEAR WARRANTY

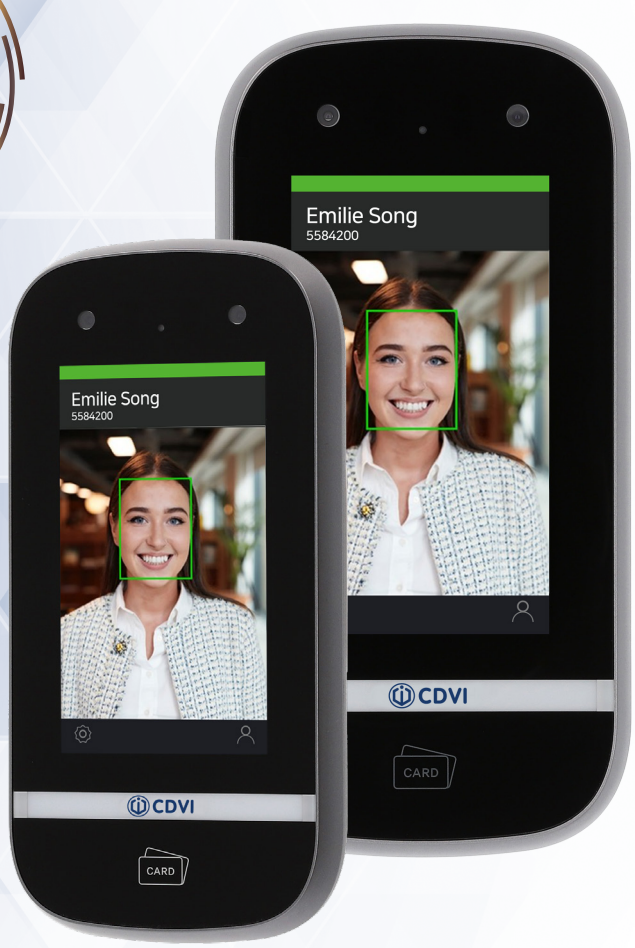

IFACE®

ievo iface™ Facial Recognition Terminal

RoHS CE UKCA

EN

1] CONTENTS

Title	Page
2] INTRODUCTION	3
About this Manual	3
Preliminary Installation Instructions	3
3] PACKAGE CONTENTS	3
4] PRODUCT PRESENTATION	4
Technical Specifications	4
Parts and Functions	5
Accessories	5
Terminals	6
Touch Screen	7
5] INSTALLATION	8
Installation Requirements	8
Installation Procedure	10
6] WIRING	12
Power Connection	12
Network Connection	12
Relay Connection	12
7] ENROLLMENT	16
Enroll User	16
Delete User	16
8] AUTHENTICATION	17
9] ADVANCED SETTINGS - OSD MENU LIST	18
User	18
Device	19
Communication	21
Display	22
Authentication	23
Log	24
10] MAINTENANCE	25

2] INTRODUCTION

About this Manual

iface™ is an advanced face recognition terminal that provides highly accurate face recognition in an embedded system. This manual contains the descriptions and operational instructions for the iface™. It is intended and written for system administrators who are in charge of overall operation including installation and management. We recommend you familiarise yourself with this manual in order to make use of the product correctly and effectively.

Notes

- The figures and screenshots in this guide are given for illustration purposes only and may differ from the actual product.
- Due to continuous technological improvements, the guide may not contain the most up-to-date information. For further information not covered in this guide, please contact your local CDVI Technical Support team.

Preliminary Installation Instructions

- Do not expose the device to direct sunlight or any other external environment. This device is intended for internal use only.
- Do not install the device to any harsh environments such as heaters, water pipes or excess moisture, gases, or dust.
- Keep the front of the device away from strong ambient light; strong illumination (e.g. halogen lamps) may degrade the performance of the device.

3] PACKAGE CONTENTS

	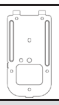		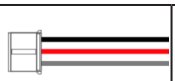			
Main unit	**Mounting plate**	**Power cable**	**Relay cable**	**GPI cable**	**Wiegand cable**	**RS-485 cable**
1	1	1	1	1	1	1
	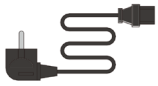					
AC adapter	**Power cord**	**Diode**	**Manual**			
1	1	1	1			

4] PRODUCT PRESENTATION

Technical Specifications

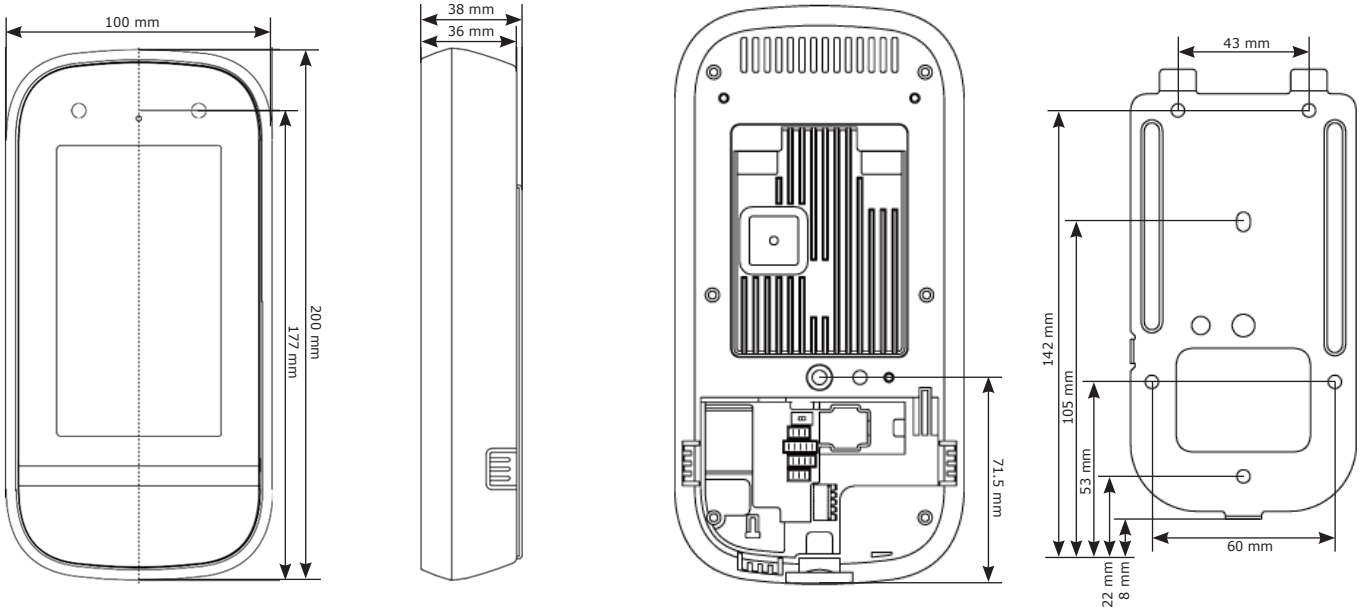

Feature	Description
CPU	ARM Cortex A53 OctaCore (8 core) operating at 1.4GHz
Memory	2GB RAM, 8GB Flash
Number of cameras	Two
Display	5” LCD with touch
IR LED	YES, for low ambient light levels and supplementary face detection support
White LED	YES, for adjunct lighting of face
Ethernet	Standard 10/100 BaseT and GigE
Dimensions	100 x 200 x 36 mm
Weight	450 g (1 pound)
Capture range	40 cm to 200 cm
User’s height range	145 cm to 210 cm (with system installed at 135 cm)
Enrollment speed	About 5 seconds
Recognition speed	About 1 second total in 1:N mode with 20,000 subjects in local database
Enrollment	20,000 users total DB size (max 20,000 users in 1:N mode)
Fake face detection	YES
Audio	YES (Speaker only)
Input power	15Vdc
RF Card reader	ISO/IEC 14443 reader for MIFARE®, DESFire® and FeliCa® cards (standard)
Connections	RJ45 for LAN, Wiegand IN/OUT, GPIO (3), RS485, dry contact relay, SIM Socket (optional)
USB	Only for host / service modes and data back up.
Temperature	Operating: 0°C to 45°C
	Non-operating: -20°C to 60°C
Humidity	Operating: 8% to 85% relative humidity, non-condensing
	Non-operating: 8% to 90% relative humidity, non-condensing

Parts and Functions

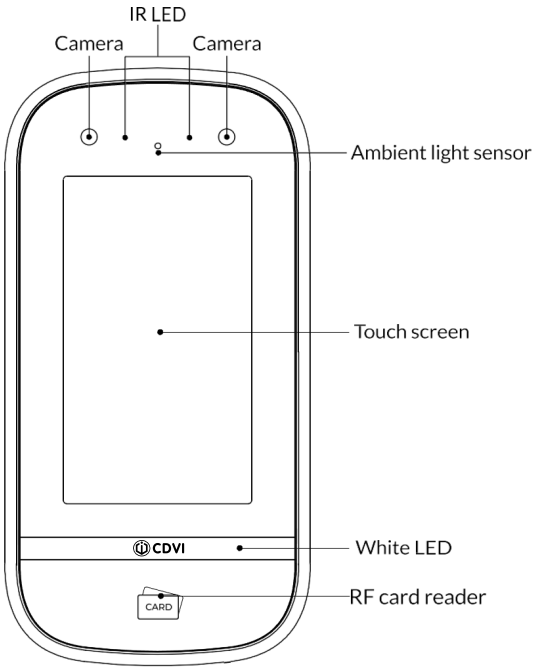

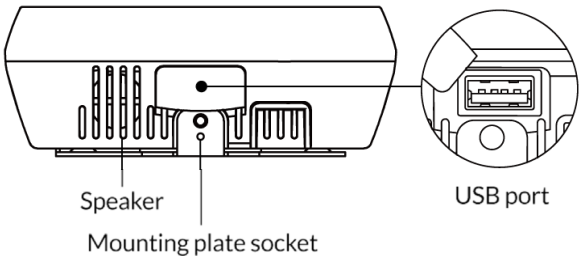

Item	Description
Camera	Captures the face images
IR LED	Illuminates the face using the NIR lighting when capturing the faces
Touch screen	Shows preview images before capture and provides a graphical interface for enrollment and device configuration
White LED	Gives supplemental light in dim light
RF card reader	Indicates the area where RF cards can be read
Ambient light sensor	Detects changes of light in the surrounding environment
Speaker	Delivers sound from the device
Mounting plate socket	Attaches the unit the mounting plate
USB port	Connects a USB (FAT32) flash drive for back up and restoration of face database

Accessories

Item	Description
Mounting bracket	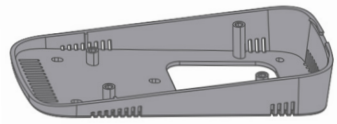
RF card writer	Dual RF card reader/writer
RF card	MIFARE®, DESFire®, FeliCa®

Terminals

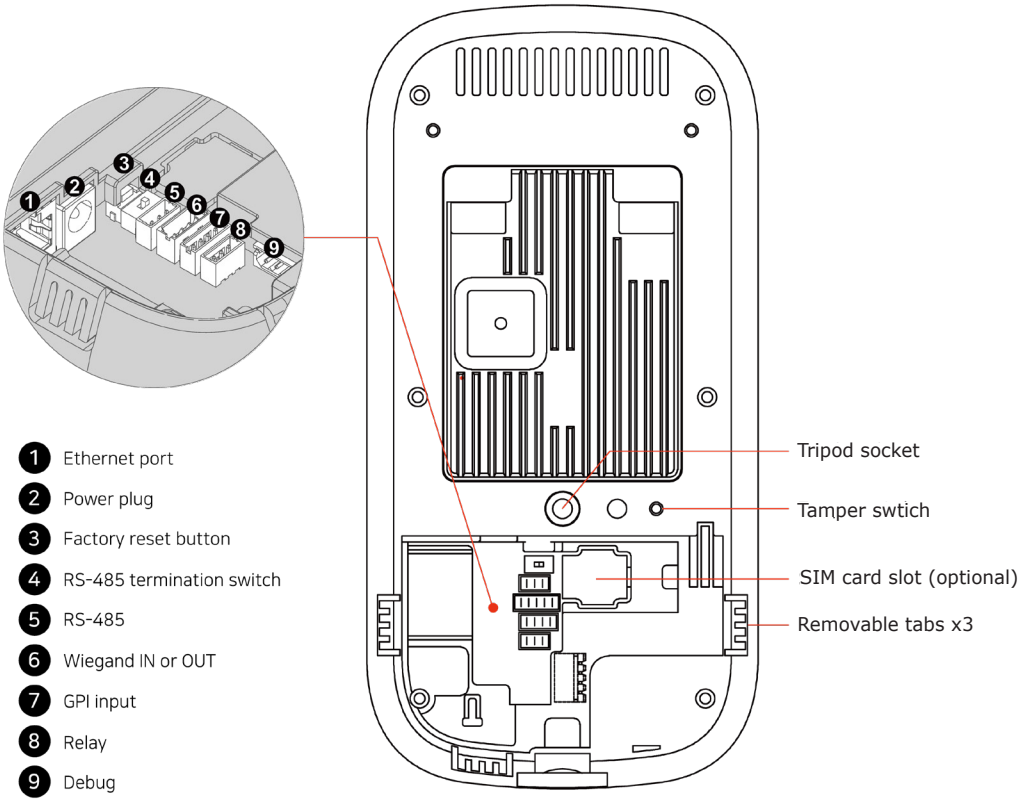

Item	Description
Tripod socket (not supplied)	Attaches a tripod (or equivalent mount) with a standard 1/4-20 UNC screw
Tamper switch	Starts an alarm, if configured, when a physical tampering attempt is detected *(see p.18 for more information)*
SIM card slot (optional)	Indicates area where a SIM card can be connected
Removable tabs	Allows for routing of power, Ethernet and other cables to go through the openings on the side of the unit, rather than the back, when tabs are removed. (e.g. useful in tabletop deployments)
Ethernet port	Connects an ethernet cable
Power plug	Connects the power cable to the unit
Factory reset button	Restores the device to its original manufacturer settings
RS-485 termination switch	Provides termination when the device is located at the physical end of RS-485 wiring
RS-485	Connects the RS-485 cable
Wiegand input or output	Connects the Wiegand cable either as input or as output selectively
GPI input	Connects the GPI cable
Relay	Connects the relay cable

Touch Screen

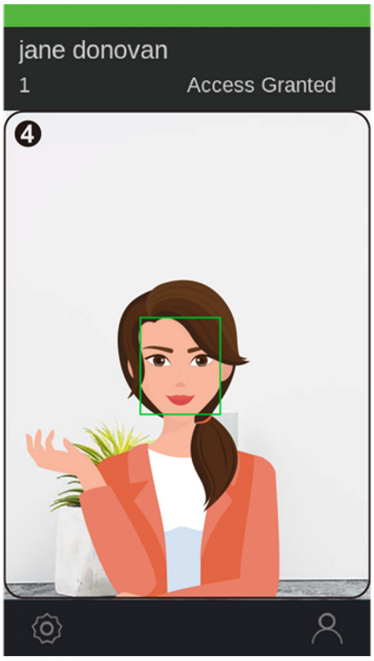

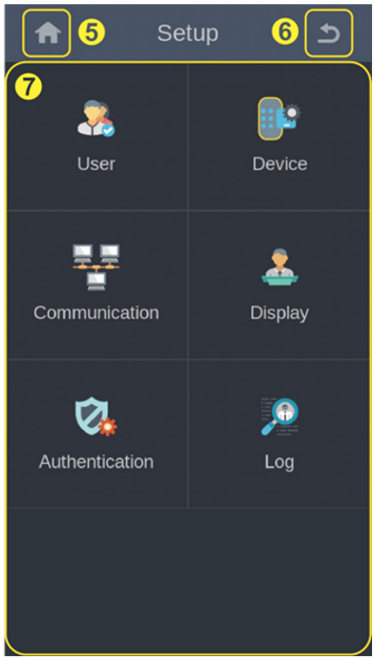

No.	Item	Description
1	Status indicator	Shows the status of network connection and third party application • White: Online • Red: Offline, not usable
4	Preview screen	Gives a preview of subject's face
5	Home button	Goes to the home screen
6	Back button	Goes back to the previous menu screen
7	Settings	Shows settings menu – User, Device, Communication, Display, Authentication, Log

5] INSTALLATION

This chapter gives information about the requirements and the prerequisites for installing iface™ and the installation procedures.

Installation Requirements

Environmental Requirements

The iface™ is designed and intended for indoor use only. The device is not weatherproof and must not be exposed to water, ice, extreme temperatures or other adverse weather conditions.

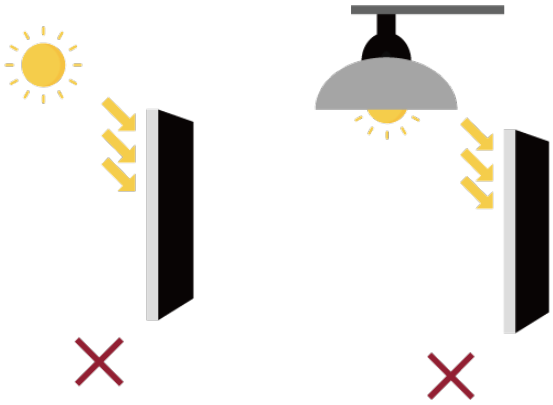

- Avoid locations that are exposed to direct sunlight and other strong illuminations.
- Choose a location with moderate ambient light.

Determine the mounting height

The recommended mounting height is 135 cm (53 inches) from the floor to the bottom of the device. This covers a person's height from 140 cm (55 inches) up to 210 cm (75 inches).

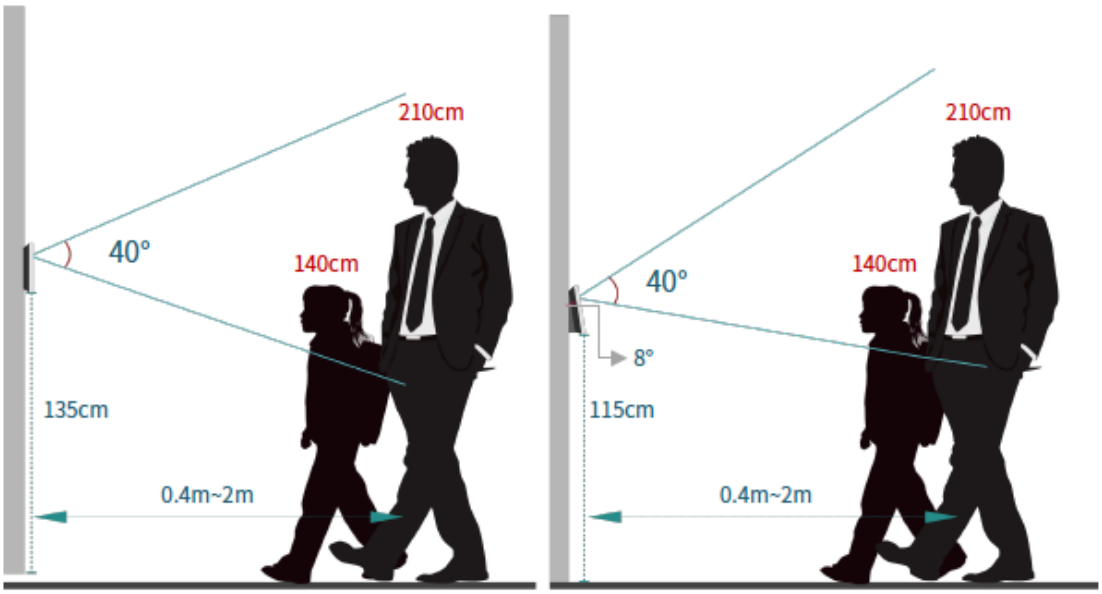

Default | **With optional mounting bracket**

Cable Requirements

- Use a stable power supply adapter of 15Vdc (± 5%) with a minimum 2A.
- Make sure that the power cable is as short as possible and that you have the correct wire gauge (22 AWG or smaller in number)
- Use CAT5 or later for the Ethernet cable.

Input Voltage (V)	**Wire gauge** (AWG)	**Power cable length (m)**	
		Recommended	**Max**
12	16	26.3	37.9
	18	15.9	23.8
	20	10.0	15.0
	22	6.3	9.4
15	20	25.0	37.5
	22	15.7	23.6
24	20	70.1	105.1
	22	44.0	66.0

Tool Requirements

The following tools can be necessary for installation and are not supplied by default.

Purpose	**Name**	**Tool**	**Note**
General	Screw driver		Cross head
	Tape ruler		For measuring the installation height
Concrete wall mount	Cutting plier		
	Electric drill		With a drill bit and anchor bolts
	Marker		
	Hammer		

Installation Procedure

Wall mount

You can install the device onto a wall directly by using the mounting plate.

1 Remove the screw that attaches iface™ to the mounting plate and disassemble the plate.

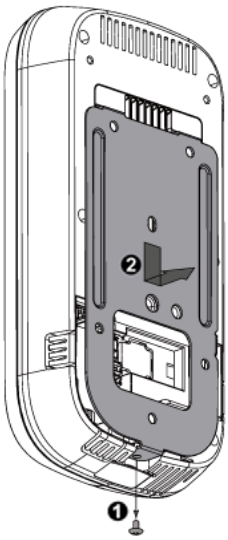

Keep the screw because it will be used to attach them together again.

2 Put the mounting plate at the pre-determined position and attach the plate onto the wall with the screws (M4 x 8).

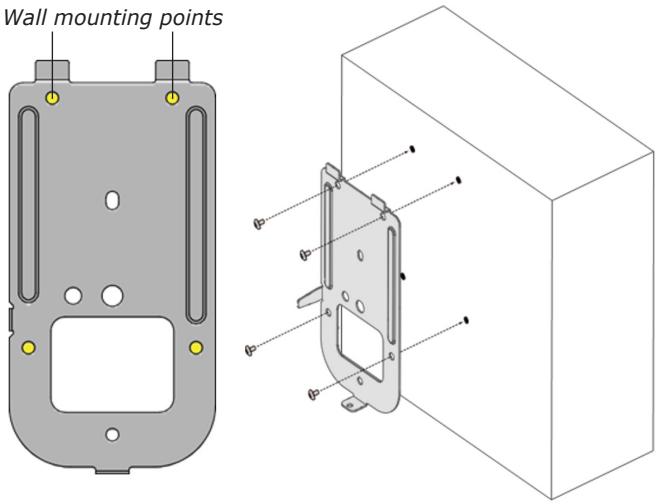

For **concrete walls**, follow these steps:

1. Put marks on the wall through the plate's screw holes by using a marker.
2. Drill the marked points by using an electric drill.
3. Attach the anchor bolts to the holes by using a hammer.
4. Attach the plate to the wall with the screws.

3 Connect the power cable and peripheral cables, if necessary, to the connectors in the rear panel. (See Connecting Cables for more information)

4 **Note:** Step to be included only for conduit mounting.

Remove one or more plastic tabs to allow the wire routing and let the cables go through the openings.

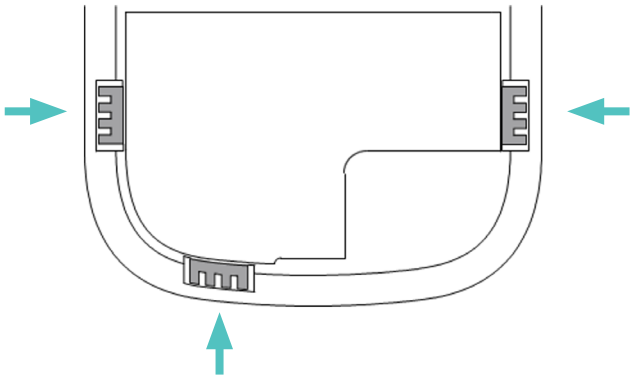

5 Put the device onto the installed plate, slide it downward, and attach it with the screw (M3 x 6)

Gang box mount

You can also install the device on a gang box (outlet box) by using the mounting plate.

1 Remove the screw that attaches iface™ to the mounting plate and disassemble the plate.

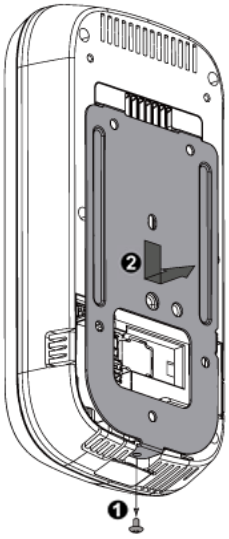

Keep the screw because it will be used to attach them together again.

2 Put the mounting plate onto the gang box and attach it to the box with the screws (M4 x 8).

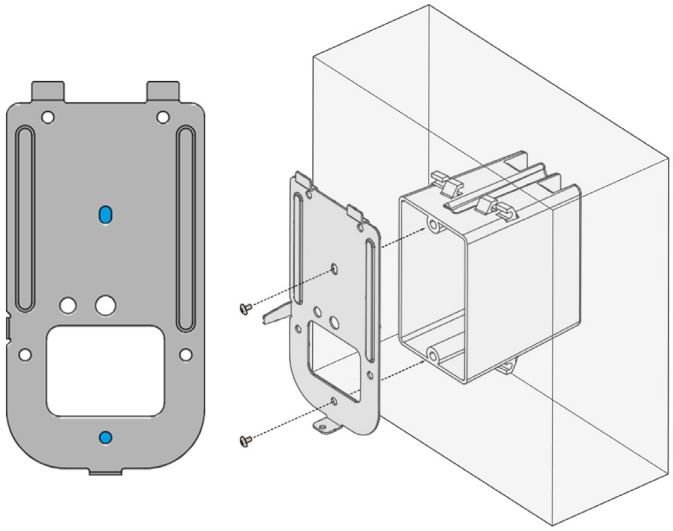

Make sure that the outgoing cables from the gang box go through the rectangular opening in the plate.

3 Connect the power cable and peripherals cables, if necessary, to the connectors in the rear panel. (See Connecting Cables for more information)

4 Put the device onto the installed plate, slide it downward, and assemble with the screw (M3 x 6)

6] WIRING

Power Connection

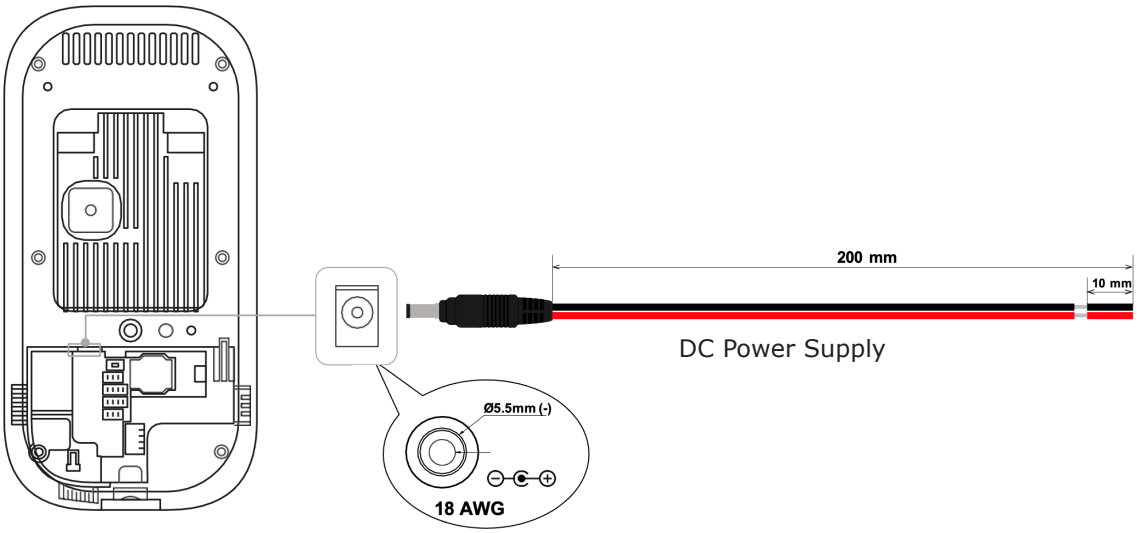

Network Connection

RJ-45 connector for 10/100/1000 Base-T Ethernet communication, minimum CAT5 cable.

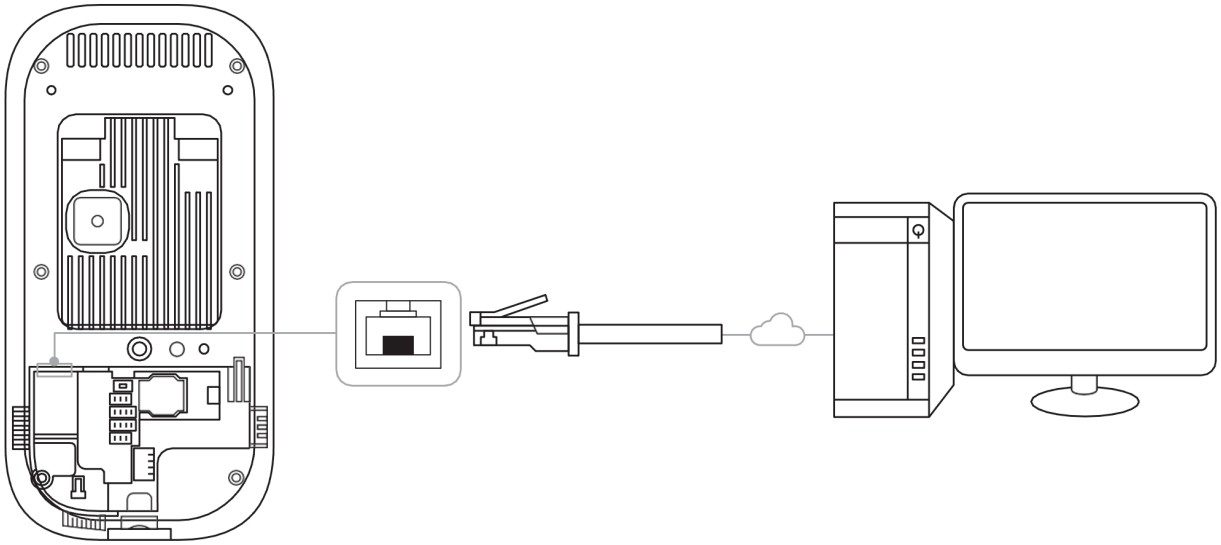

Relay Connection

Relay

GPI

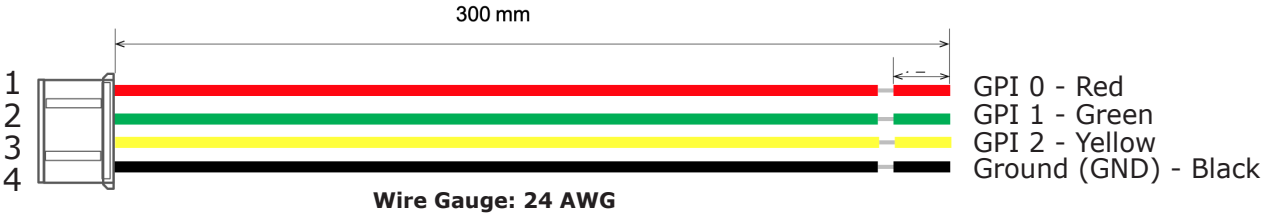

Locking

There are two types of dead-bolt door lock connections and configuration supported: fail safe and fail secure.

- Use different power supplies for the iface™ and the door lock.
- Install the diode at both ends of the circuit (as shown in the figure below), close to the door lock to protect the relay contact from the reverse current that occurs when the door lock works.
- Make sure that the diode direction is correct.

Fail Safe Configuration

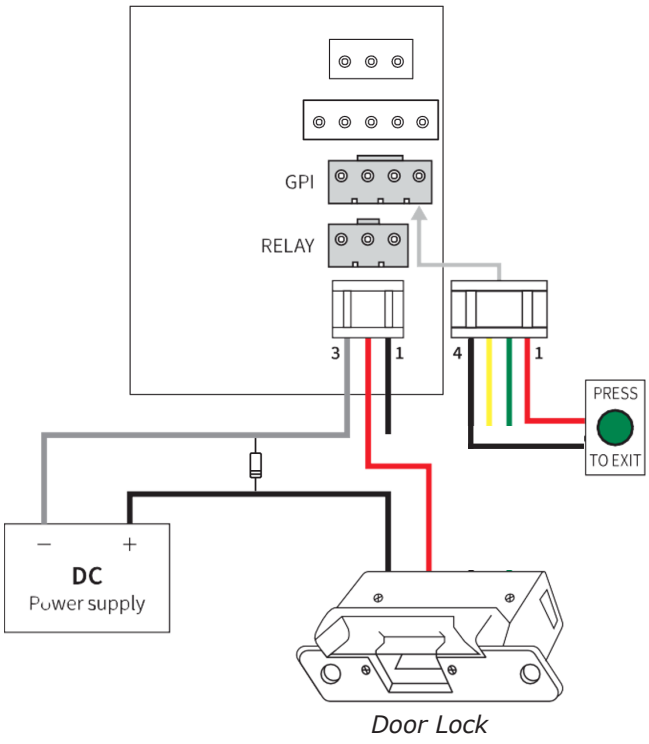

Fail Secure Configuration

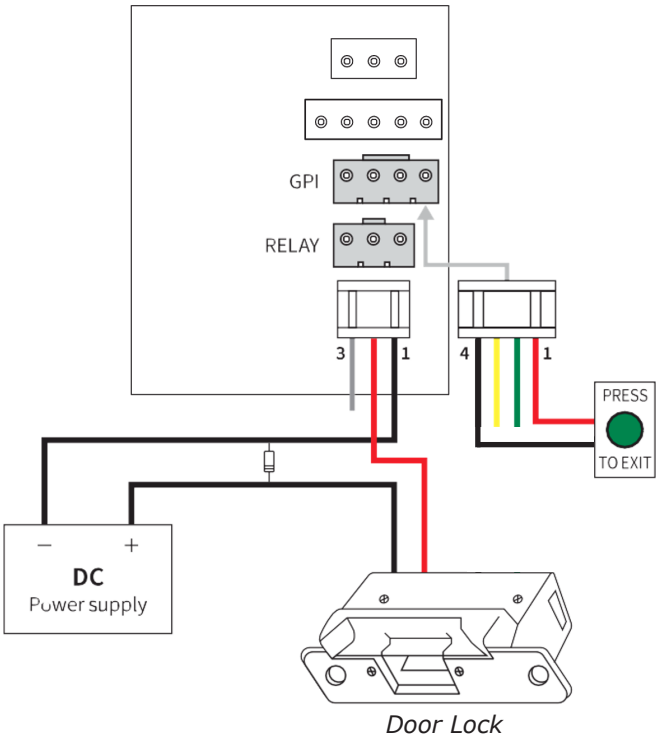

Automatic Door

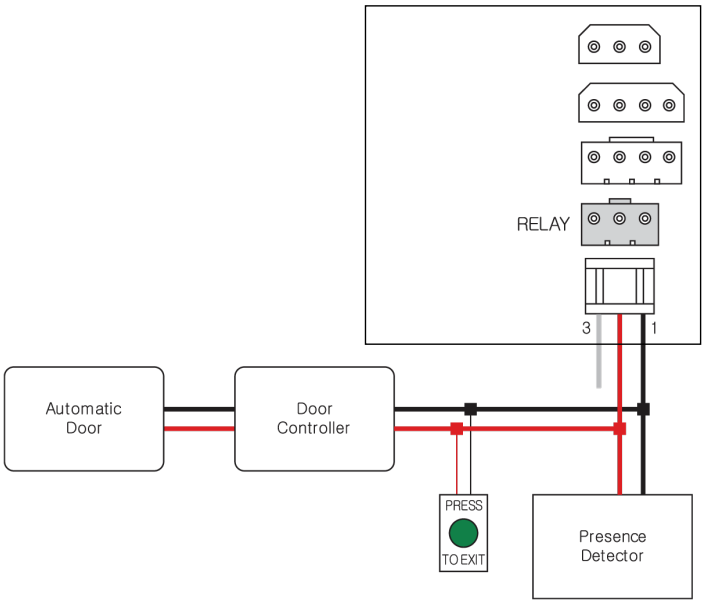

	Pin	Output Function
RELAY	1	Normally Open (NO)
	2	Common (COM)
	3	Normally Closed (NC)
GPI	1	GPI 0
	2	GPI 1
	3	GPI 2
	4	Ground (GND)

Alarm light

Internal relay interface with nominal switching capacity of 1A, 30Vdc or 0.3A, 120Vac, resistive load.

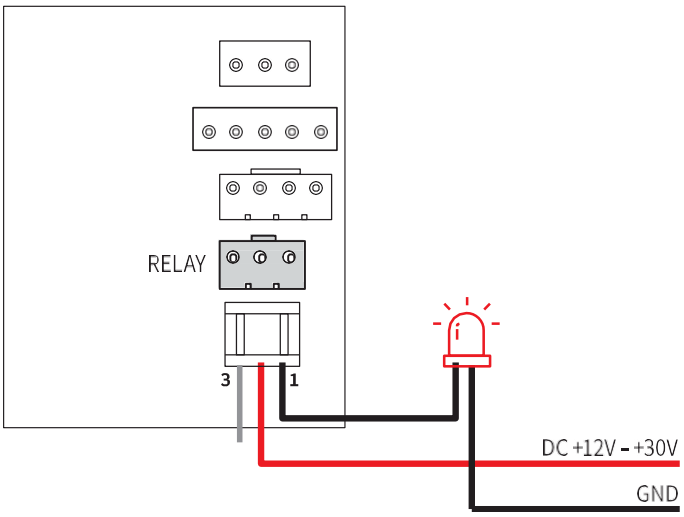

	Pin	Output Function
RELAY	1	Normally Open (NO)
	2	Common (COM)
	3	Normally Closed (NC)

GPI Connection

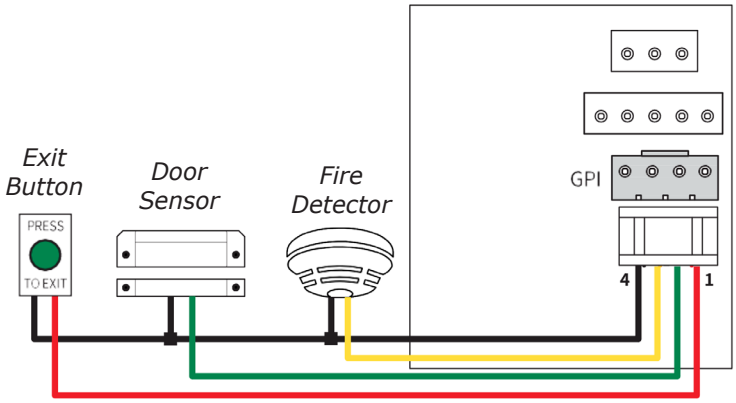

	Pin	Output Function
GPI	1	GPI 0 (Exit button)
	2	GPI 1 (Door sensor)
	3	GPI 2 (Fire detector)
	4	Ground (GND)

Wiegand

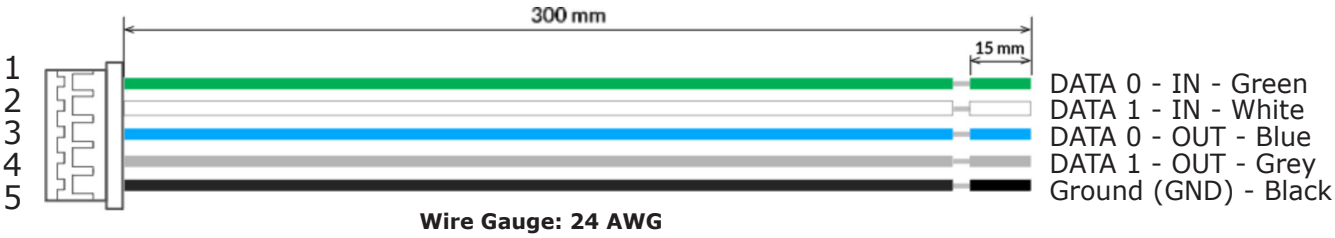

Wire Gauge: 24 AWG

Wiegand IN

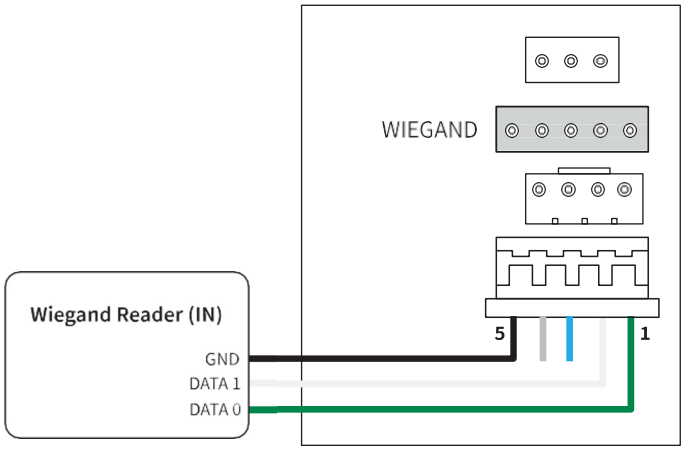

Wiegand OUT

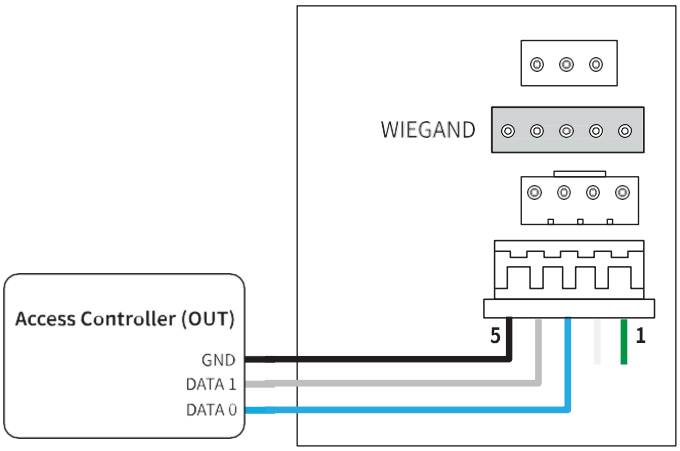

7] ENROLLMENT

This section explains how to enroll users in **Standalone** mode only. If you are using the **isync software**, do not enroll users manually, as isync will clear manually added users! The same will happen for manually deleted users: If the user is registered in isync, the software will automatically add the deleted user back in.

Follow the isync manual for enrolling and deleting users in the isync software.

Enroll User

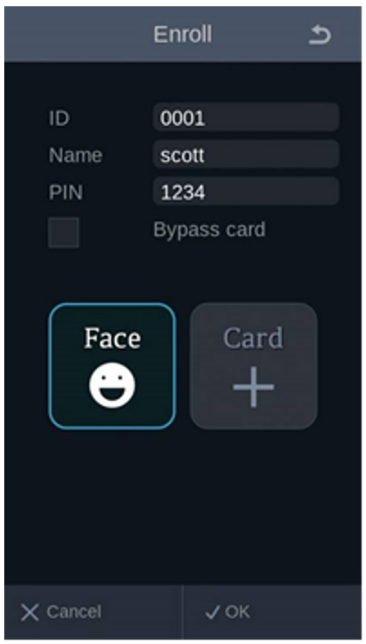

1. Press the User button on the main screen.
2. Press **Enroll** Enroll at the bottom.
3. Type **ID** and **Name**.
4. Press one or more credential type buttons (Face, Card) to add to the user.
   - For **Face**, let the user stand in front of the device and complete the face capture.
   - For **Card**, put the card on the device's card reader. When the CSN (card serial number) appears on the screen, press **OK**.

Option: Select Bypass card to allow the user to get access permission by using a registered card alone regardless of the authentication mode.

5. Press **OK** to complete the enrollment.

Delete User

1. Press the User button on the main screen.
2. Press the **Delete** button.
3. Select the user you want to delete and press the Delete button again.

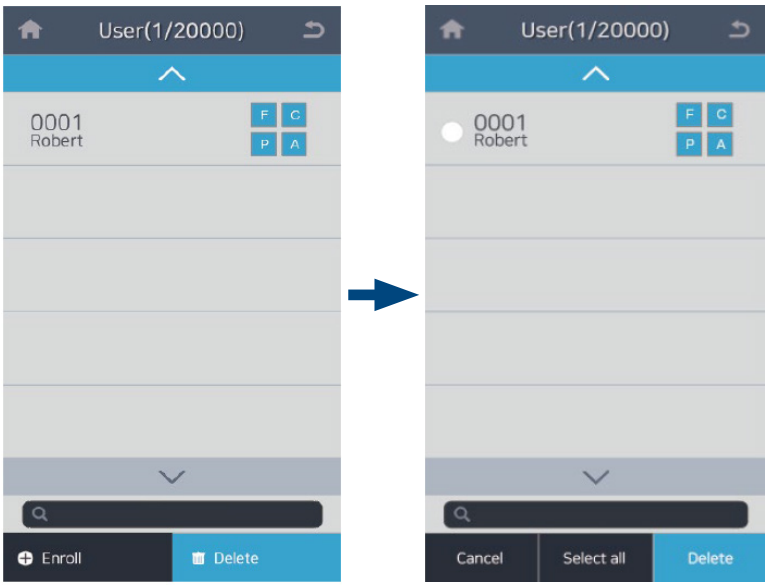

8] AUTHENITCATION

iface™ detects and displays the subject's face over 2.0 meters from the system on the high-resolution colour display. The subject will naturally walk towards the face capture range (of 0.4 - 2m). Once the system recognises the subject, the result will be displayed immediately with an indication line over the subject's face image.

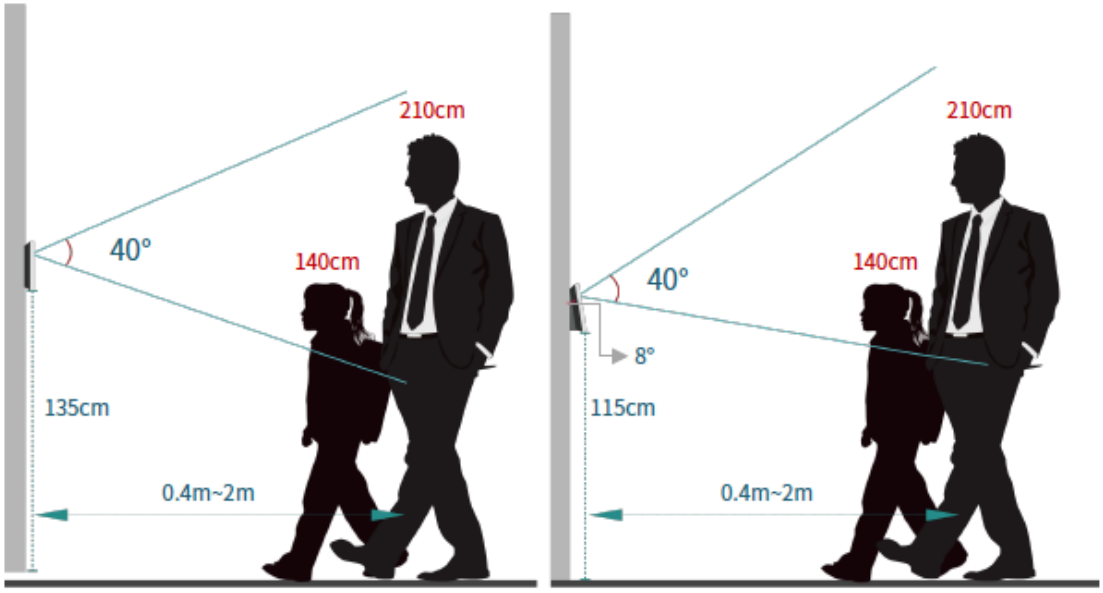

1 Position yourself in front of device, while looking at the screen. A white box appears around the face when your face is detected.

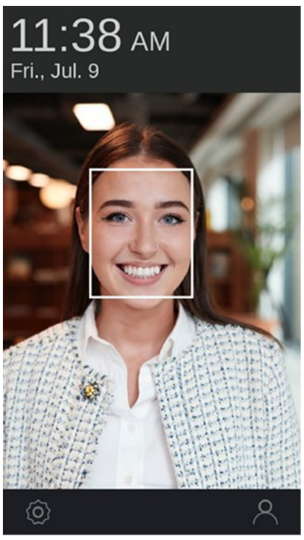

2 Authentication result is displayed at the top of the screen depending on whether or not your face is successfully recognised.

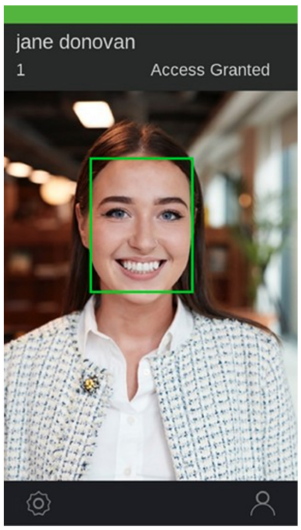

9] ADVANCED SETTINGS - OSD MENU LIST

To enter the advanced setting menus of the iface, press the top left on the main screen. The following options will be displayed:

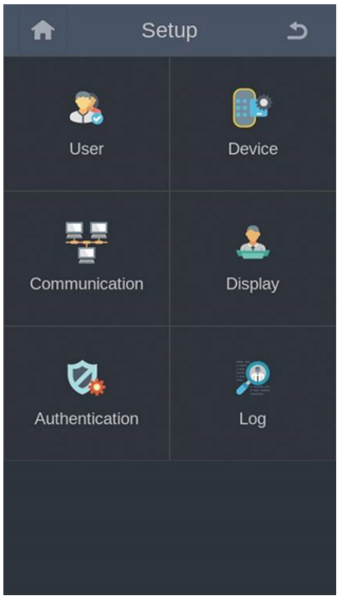

1. User
2. Device
3. Communication
4. Display
5. Authentication
6. Log

You must set an Admin password to protect advanced settings menus and the system.

Go to Authentication > Admin password. Enter password.

1. User

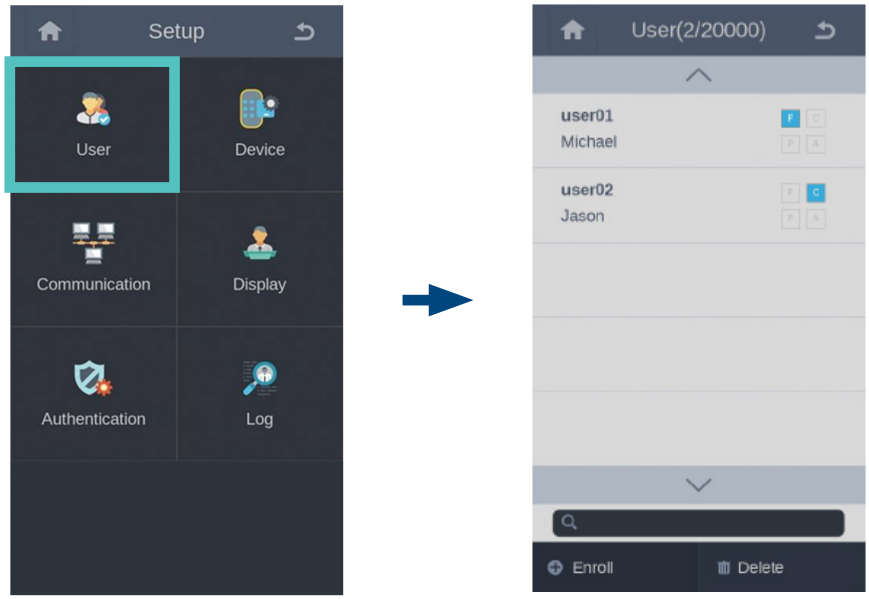

Sub-menu	Description
Enroll	Starts user enrollment
Delete	Deletes users
Modify	Edits user information by pressing a registered user
Search	Finds users by ID

2. Device

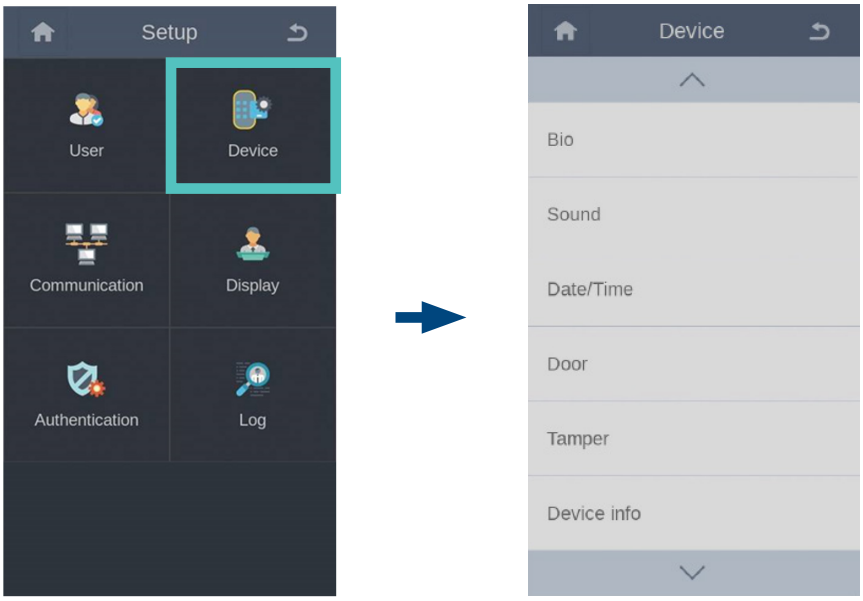

Sub-menu	Options	Description
Bio	Fake face	Selects the fake face detect option
	Face image log	Selects whether to show face image on event log
Sound	Speaker volume	Sets the volume of the device: **0 - 10**
Date/ Time	Time settings	Configures device date and time
Door	Relay	Selects whether to use relay
	Open duration	Configures time duration for door open relay
	Use exit	Selects a GPI port number connected to exit door button: **Not used, GPI Port 1, GPI Port 2, GPI Port 3**
	Exit type	Selects contact state of the GPI port that exit door button uses: **NC, NO**
	Use alarm	Selects a GPI port number connected to the alarm sensor:**Not used, GPI Port 1, GPI Port 2, GPI Port 3**
	Alarm type	Selects contact state of the GPI port that the alarm sensor uses: **NC, NO**
	Use sensor	Selects a GPI port number connected to the sensor: **Not used, GPI Port 1, GPI Port 2, GPI Port 3**
	Sensor type	Selects contact state of the GPI port that the sensor uses: **NC, NO**
	Held on duration	Types the acceptable door held open period
Tamper	Modes	Selects a tamper protection mode: **Not used, Beep mode, Secure mode** **Standalone mode:** If you select Secure mode, all the data and settings are deleted permanently in the device when physical tampering is detected / attempted. **isync software:** The software will repopulate the device after data deletion for all previously registered users.

Sub-menu	Options	Description
Device info	Device name	Configures the device name
	Model	Shows the model name
	FW version	Shows the device firmware version
	APP version	Shows the application version
	MAC	Shows the MAC address
	S/N	Shows the serial number
	IOMicom version	Shows the IO Micom revision number
	H/W version	Shows the hardware revision number
	RF Micom version	Shows the RF Micom revision number
	Algo version	Shows the algorithm revision number
Database	User import	Imports the user database from connected USB drive
	User export	Exports the user database to connected USB drive
	Debug export	Exports the debug data to connected USB drive
Camera	Camera mode	5OHz or 60Hz
	Outdoor mode	Enable or disable. Improves outdoor conditions
Reset	Device reboot	Restarts device
	Factory reset	Resets all configuration settings and deletes all user data
	Reset all config	Sets all configuration settings to default
	Reset all users	Deletes all user data
Enroll guide	Use animation	Displays enroll guide before enrollment

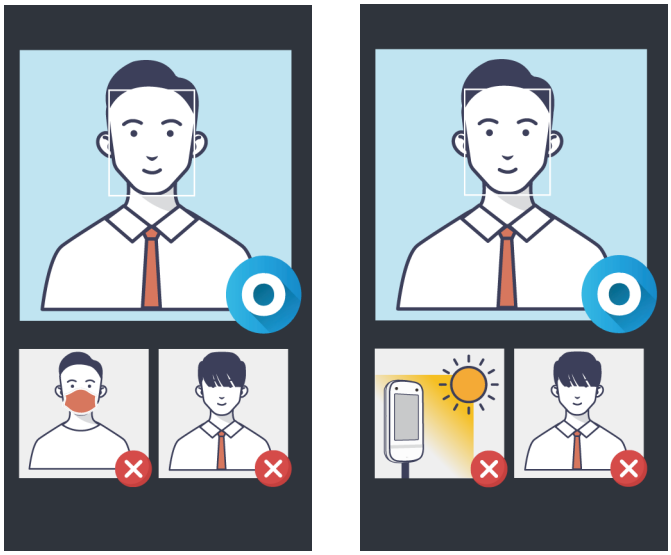

3. Communication

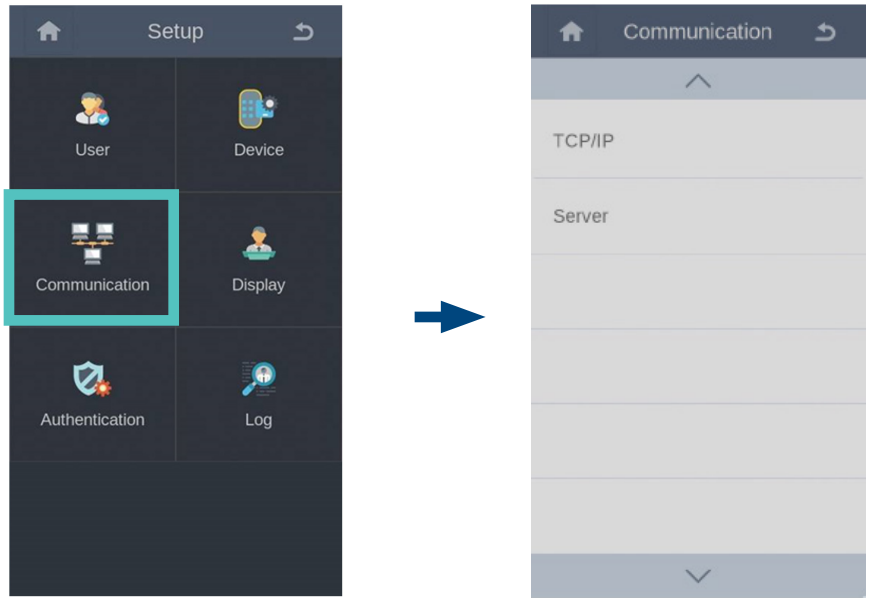

Sub-menu	Options	Description
TCP/IP	User DHCP	Selects whether to use DHCP
	IP	Shows the device's IP address
	Subnet	Shows the subnet mask
	Gateway	Shows the gateway address
	DNS 1	Shows the DNS #1
	DNS 2	Shows the DNS #2
Server	User server	Selects whether to use server
	Server IP	Types the server's IP address
	Port	Types the server's port number
	Commute Uri	Type server URI to receive T&A event logs from device
	Sync Uri	Type server URI to receive T&A event logs backed up by

4. Display

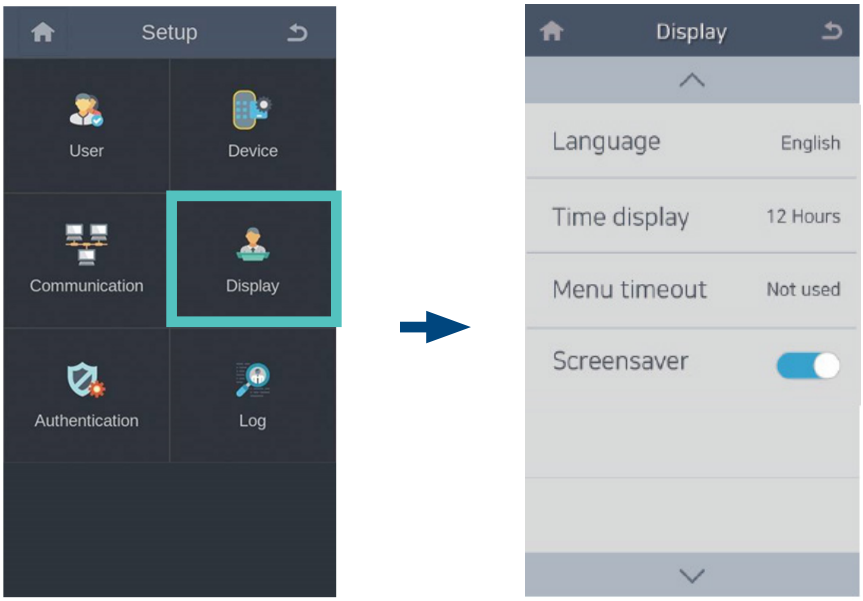

Sub-menu	Description
Language	Selects a display language
Time display	Selects time notation between 12-hour and 24-hour clock format: **12 hours, 24 hours**
Screensaver	Displays screensaver image or burn-in prevention: **Not used, Screensaver, Burn-in prevention**
Waiting Time	How many seconds before the screensaver or burn-in prevention starts: **5s, 10s, 30s, 1 min, 5 min, 10 min**
Menu timeout	If user is logged into the menu, device will automatically log out: **Not used, 10s, 20s, 30s, 60s**

5. Authentication

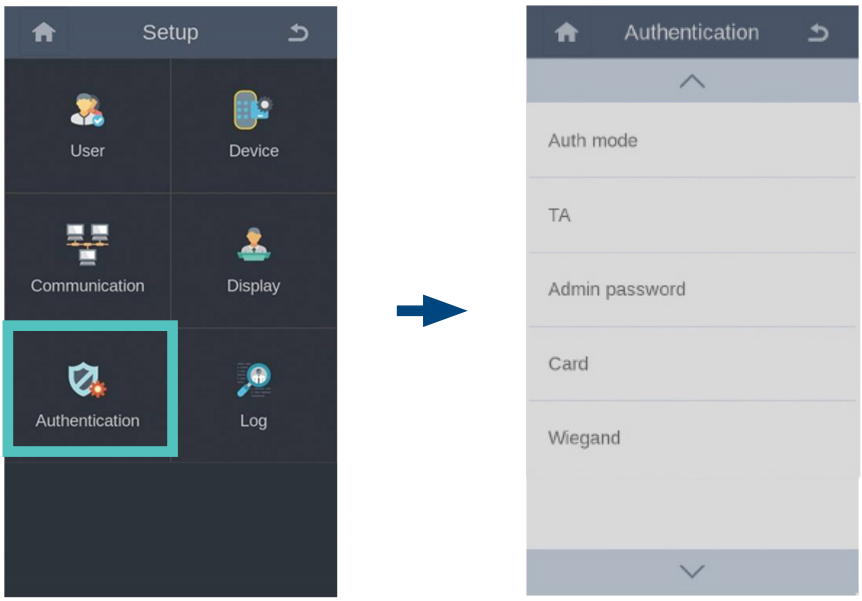

Sub-menu	Options	Description
Auth mode	Mode	Selects an authentication mode: **Face only, Face or card, Face and PIN, Card and face, Card and PIN**
	Bypass	Allows unregistered users to access
	Mask reject	Rejects non-wearing mask users
	Touch start	Starts recognition by touching the screen
	Recog threshold	Adjusts matching threshold in recognition mode (permitted value range: 90 to 100) Increasing the value increases FRR (false rejection rate) whereas decreasing the value increases FAR (false acceptance rate).
	Recog distance	Selects the distance from where face detection starts
	Enroll sensitivity	Selects the enrollment sensitivity: **Sensitive, Common, Insensitive**
	Recog sensitivity	Selects the recognition sensitivity: **Sensitive, Common, Insensitive**
	Enroll liveness	Liveness detection during enrollment
	Recog liveness	Liveness detection during recognition
	Liveness threshold	980 - 999
	1:1 Recog threshold	80 – 99
TA	Use T&A	Selects whether to use T&A functions (for future developments, dependant on your access control system)
Admin password	Use admin pw	Selects whether to use admin password
	Password	Types admin password
Card	Use CSN	Selects CSN order on card reading: **MSB, LSB**
	CSN order	Selects CSN order on card reading: **MSB, LSB**
Wiegand	Output type	Selects Wiegand output type: **Wiegand, Card, ID**

6. Log

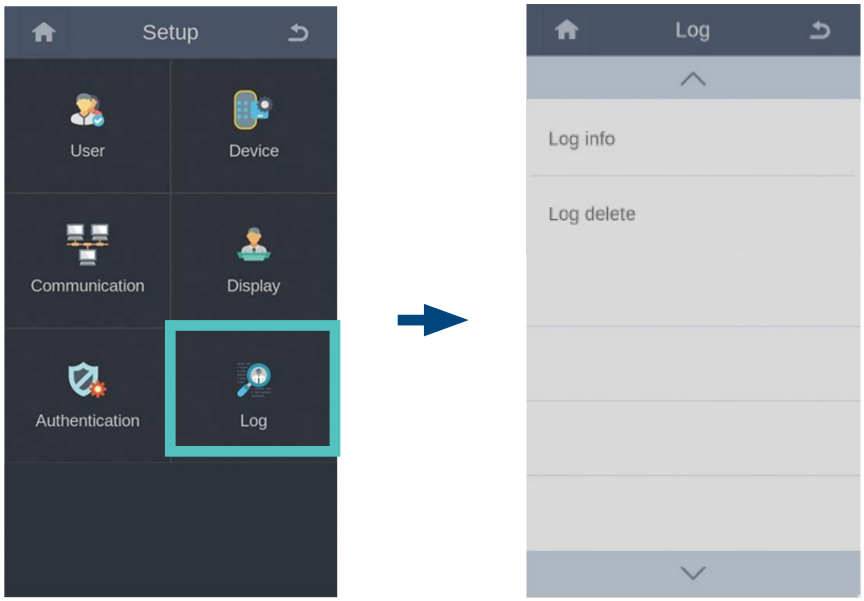

Sub-menu	Options	Description
Log info	Total used	Shows the amount used
	Total count	Shows the total amount
Logo delete	Delete log	Deletes all the logs

10] MAINTENANCE

- When cleaning the product, wipe the product with a soft and dry cloth. Do not apply water, benzene, alcohol, or spray cleaner. These may cause product failure or fire.
- Do not use any sharp tools when pressing the buttons to prevent damage to the touch screen from scratches or cuts.
- Do not attempt to dissemble, repair, or modify the device yourself. Opening or removing covers may expose you to electrical shock or other risks and may void your warranty. If the product does not work correctly, contact your dealer or your local CDVI Technical Support.
- Do not let any type of liquid, mists, or sprays get into the product. Doing so may cause electrical shock, electrical short, or product damage.
- If smoke, odours or noise rise from the device, stop using the device immediately, disconnect the power cable, and contact our Customer Support.

CDVI Group
FRANCE (Headquarters)
Phone: +33 (0) 1 48 91 01 02

CDVI FRANCE + EXPORT
+33 (0) 1 48 91 01 02
www.cdvi.fr

CDVI AMERICAS
+1 866 610 0102
www.cdvi.ca

CDVI BENELUX
+32 (0) 56 73 93 00
www.cdvibenelux.com

CDVI GERMANY
+49 (0) 251 798477 0
www.cdvi.de

CDVI SUISSE
+41 (0) 21 882 18 41
www.cdvi.ch

CDVI IBÉRICA
+34 (0) 935 390 966
www.cdviberica.com

CDVI ITALIA
+39 (0) 321 90 573
www.cdvi.it

CDVI MAROC
+212 (0) 5 22 48 09 40
www.cdvi.ma

CDVI NORDIC
+46 (0) 31 760 19 30
www.cdvi.se

CDVI UK
+44 (0) 1628 531300
www.cdvi.co.uk

CDVI POLSKA
+48 (0) 12 659 23 44
www.cdvi.com.pl

All the information contained within this document (pictures, drawings, features, specifications and dimensions) could be perceptibly different and can be changed without prior notice. - May 2024