Hanwha Vision

Network PTZ

XNP-C8253

6MP 25x AI PTZ Camera

Key Features

- Max. 6MP resolution
- 5~125mm(25x) zoom (digital 32x, total 800x zoom)
- Color: 0.1Lux(F1.6, 1/30sec), BW: 0.01Lux(F1.6, 1/30sec)
- Intelligent Analytics, Object auto tracking (Person/Vehicle), Target lock tracking
- H.264, H.265, MJPEG codec, WiseStream II
- IP66, IK10, NEMA4X, NEMA-TS 2 (2.2.8, 2.2.9)
- PTZ PLUS Design applied (Compact, Lighter, Simple cabling)

Design and specifications are subject to change without notice. The latest product information / specification can be found at HanwhaVision.com.
Hanwha Vision is formerly known as Hanwha Techwin.

© Hanwha Vision CO., LTD. All rights reserved.

XNP-C8253

6MP 25x AI PTZ Camera

Specifications

Video	
Imaging Device	1/2.8" CMOS
Resolution	3328x1872, 3072x1728, 2592x1944, 2688x1520, 1920x1080, 1600x1200, 1280x1024, 1280x960, 1280x720, 1024x768, 800x600, 800x448, 720x576, 720x480, 640x480, 640x360, 320x240
Max. Framerate	H.265/H.264: Max. 30fps/25fps(60Hz/50Hz) MJPEG: Max. 30fps/25fps(60Hz/50Hz) (@6MP Max. 5fps)
Min. Illumination	Color: 0.1Lux(F1.6, 1/30sec) BW: 0.01Lux(F1.6, 1/30sec)

Lens	
Focal Length (Zoom Ratio)	5~125mm(25x) zoom (digital 32x, total 800x zoom)
Optical Zoom	25x
Max. Aperture Ratio	F1.6(Wide)~F3.73(Tele)
Angular Field of View	H: 57.42°(Wide)~2.71°(Tele) / V: 33.54°(Wide)~1.55°(Tele)
Min. Object Distance	5m(16.4ft)
Focus Control	Oneshot AF, Focus save
Lens Type	DC auto iris

Pan / Tilt / Rotate	
Pan Range	360° Endless
Pan Speed	Max. 700°/sec, Manual: 0.024°/sec~250°/sec
Tilt Range	110°(90°~-20°)
Tilt Speed	Max. 500°/sec, Manual: 0.024°/sec~250°/sec
Sequence	Preset(300ea), Swing, Group(6ea), Trace, Tour, Auto Run, Schedule
Preset Accuracy	Up to ±0.1°, Pan/Tilt correction

Operational	
Camera Title	Displayed up to 85 characters
Direction Indicator	Support
Day & Night	Auto(ICR)
Backlight Compensation	BLC, HLC, WDR, SSDR
Wide Dynamic Range	Extreme WDR(120dB)
Digital Noise Reduction	WiseNR II (Based on AI engine), SSNR V
Digital Image Stabilization	Support(built-in gyro sensor)
Defog	Support
Motion Detection	8ea, 8point polygonal zones
Privacy Masking	32ea, 4point Quadrangle zones - Color: Gray/Green/Red/Blue/Black/White - Mosaic

Design and specifications are subject to change without notice. The latest product information / specification can be found at HanwhaVision.com.
Hanwha Vision is formerly known as Hanwha Techwin.

© Hanwha Vision CO., LTD. All rights reserved.

Gain Control	Off / Max gain / Manual
White Balance	ATW / NarrowATW / AWC / Manual / Indoor / Outdoor / Mercury / Sodium
Electronic Shutter Speed	Minimum / Maximum / Anti flicker (2~1/12,000sec) Prefer shutter control(Based on AI engine)
Video Rotation	Flip&Mirror
Analytics	Classified object type : Person/Face/Vehicle/License plate Attributes : Vehicle(Type:car/bus/truck/motorcycle/bicycle) Support DetectionShot Analytics events based on AI engine - Object detection, Virtual line(Crossing/Direction), Virtual area(Loitering/Intrusion/Enter/Exit), Motion detection Analytics events - Tampering, Fog detection, Shock detection, Virtual area(Appear/Disappear) * Audio detection, Sound classification(Via optional I/O box SPM-4210)
Alarm Triggers	Analytics, Network disconnect, Alarm input((Via optional I/O box SPM-4210), Time schedule, MQTT subscription
Alarm Events	When alarm trigger occurred - File upload(image) : e-mail/FTP/SFTP - FIle upload(video clip): FTP/SFTP - Notification : e-mail - Recording : SD/SDHC/SDXC or NAS recording at event triggers - Handover: PTZ preset, send message by HTTP/HTTPS/TCP - Audio clip playback - MQTT: publication * Alarm output / Audio clip playback(Via optional I/O box SPM-4210)
Water Removal	Support(Spin dry, Lens heater)
Auto Tracking	Support Object auto tracking(Person/Vehicle) Target lock tracking

Network	
Ethernet	Metal shielded RJ-45(10/100BASE-T)
Video Compression	H.265/H.264: Main/Baseline/High, MJPEG
Smart Codec	Manual(5ea area), WiseStream II , WiseStreamIII(Based on AI Engine)
Video Quality Adjustment	H.264/H.265: Target bitrate level control MJPEG: Target bitrate level control
Bitrate Control	H.264/H.265: CBR or VBR MJPEG: VBR
Streaming	Unicast(20 users) / Multicast (128 user) Multiple streaming(Up to 10 profiles)
Protocol	IPv4, IPv6, TCP/IP, UDP/IP, RTP(UDP), RTP(TCP), RTCP, RTSP, NTP, HTTP, HTTPS, SSL/TLS, DHCP, FTP/SFTP, SMTP, ICMP, IGMP, SNMPv1/v2c/v3(MIB-2), ARP, DNS, DDNS, QoS, UPnP, Bonjour, LLDP, CDP, SRTP(TCP, UDP Unicast), NTCIP1205, MQTT
Application Programming Interface	ONVIF Profile S/G/T/M SUNAPI(HTTP API) Hanwha Vision Open Platform

Security	
OS / Firmware Protect	Encrypted Firmware, Secure boot, Signed Firmware
User authentication	Digest Authentication, Prevent brute-force attacks
Network authentication	IEEE 802.1X(EAP-TLS, EAP-LEAP, EAP-PEAP, MSCHAPv2)
Secure Communication	HTTPS, WSS(WebSocket Secure), SRTP
Access Control	IP-based access control
Data Protect	Encryption Credentials, Encrypt compress for live recording file export
Audit	Access / System / Event Log management
Device ID	Device certificate(Hanwha Vision Root CA)
Secure Storage	TPM(Trusted platform module), HTPM(Hanwha trusted platform module), SDcard partition encrypt
Security Certificate	TPM with FIPS 140-2 level 2

Design and specifications are subject to change without notice. The latest product information / specification can be found at HanwhaVision.com.
Hanwha Vision is formerly known as Hanwha Techwin.

© Hanwha Vision CO., LTD. All rights reserved.

General	
Webpage Language	English, Korean, Chinese, French, Italian, Spanish, German, Japanese, Russian, Portuguese, Czech, Polish, Turkish, Dutch, Hungarian, Greek
Edge Storage	Micro SD/SDHC/SDXC 2slot 1TB (512GBx2)
Memory	4GB RAM, 512MB Flash

Environmental & Electrical	
Operating Temperature / Humidity	-40°C~+55°C(-40°F ~ +131°F) / +74°C(+165°F) (MAX) based on NEMA-TS 2(2.2.7) * Start up should be done at above -30°C 0~100%RH(Condensing) Humidity control with AIR vent
Storage Temperature / Humidity	-50°C ~ +60°C(-58°F ~ +140°F) / 0~90% RH
Wind Load	241km/h(150mph) EPA(Effective Projected Area) : 0.035㎡
Certification	IP66, IK10, NEMA4X, NEMA-TS 2(2.2.7, 2.2.8, 2.2.9)
Input Voltage	PoE+(IEEE802.3at, Class4)
Power Consumption	Typical 24W, Max 25.5W

Mechanical	
Color / Material	Body : White / Aluminum Head : Black / Polycarbontate Hard-coated dome
RAL Code	White: RAL9003 / Black: RAL9005
Product Dimensions / Weight	ø158x293.3mm(6.22x11.55") / 3200g(7.05lb)
Hanging Mount (Dome)	SBP-156HMW
Ceiling Mount (Assy)	SBP-156CMW, SBP-300CMTS, SBP-300CMW1/900CMW, SBP-150CMI/300CMI
Wall Mount	SBP-156WMW, SBP-300WMW, SBP-300WMW1, SBP-400WMW, SBP-250WMW
Pole Mount	SBP-300PMW2
In-ceiling Mount	SHP-1563FPW, SHP-1563FW
Parapet Mount	SBP-156LMW, SBP-156LMW1, SBP-300LMW
Corner Mount	SBP-156KMW, SBP-300KMW1
Cabinet	SBP-300NBW
Other Compatible Models	SPB-PTZ85W

Certifications & Standards	
EMC	FCC 47 CFR 15 Subpart B Class A ICES-3(A)/NMB-3(A) CE/UKCA - EN 55032 Class A, EN 50130-4 VCCI CISPR 32 Class A RCM AS/NZS CISPR 32 Class A KS C 9832 Class A , KS C 9835
Safety	UL 62368-1, CAN/CSA C22.2 NO. 62368-1 IEC 62471
Environment	EN IEC 63000 IEC 60529 IP66, IEC 62262 IK10 NEMA TS 2-2013 (2.2.7, 2.2.8, 2.2.9) NEMA 250 type 4X

DORI (EN62676-4 standard)	
Detect (25PPM/ 8PPF)	Wide: 121.5m(398.7ft) / Tele: 2813.9m(9232.1ft)
Observe (63PPM/ 19PPF)	Wide: 48.6m(159.5ft)/ Tele: 1125.6m(3692.8ft)
Recognize (125PPM/ 38PPF)	Wide: 24.3m(79.7ft)/ Tele: 562.8m(1846.4ft)
Identify (250PPM/ 76PPF)	Wide: 12.2m(39.9ft) / Tele: 281.4m(923.2ft)

Design and specifications are subject to change without notice. The latest product information / specification can be found at HanwhaVision.com.
Hanwha Vision is formerly known as Hanwha Techwin.

© Hanwha Vision CO., LTD. All rights reserved.

XNP-C8253

6MP 25x AI PTZ Camera

CAD

Unit:mm [inch]

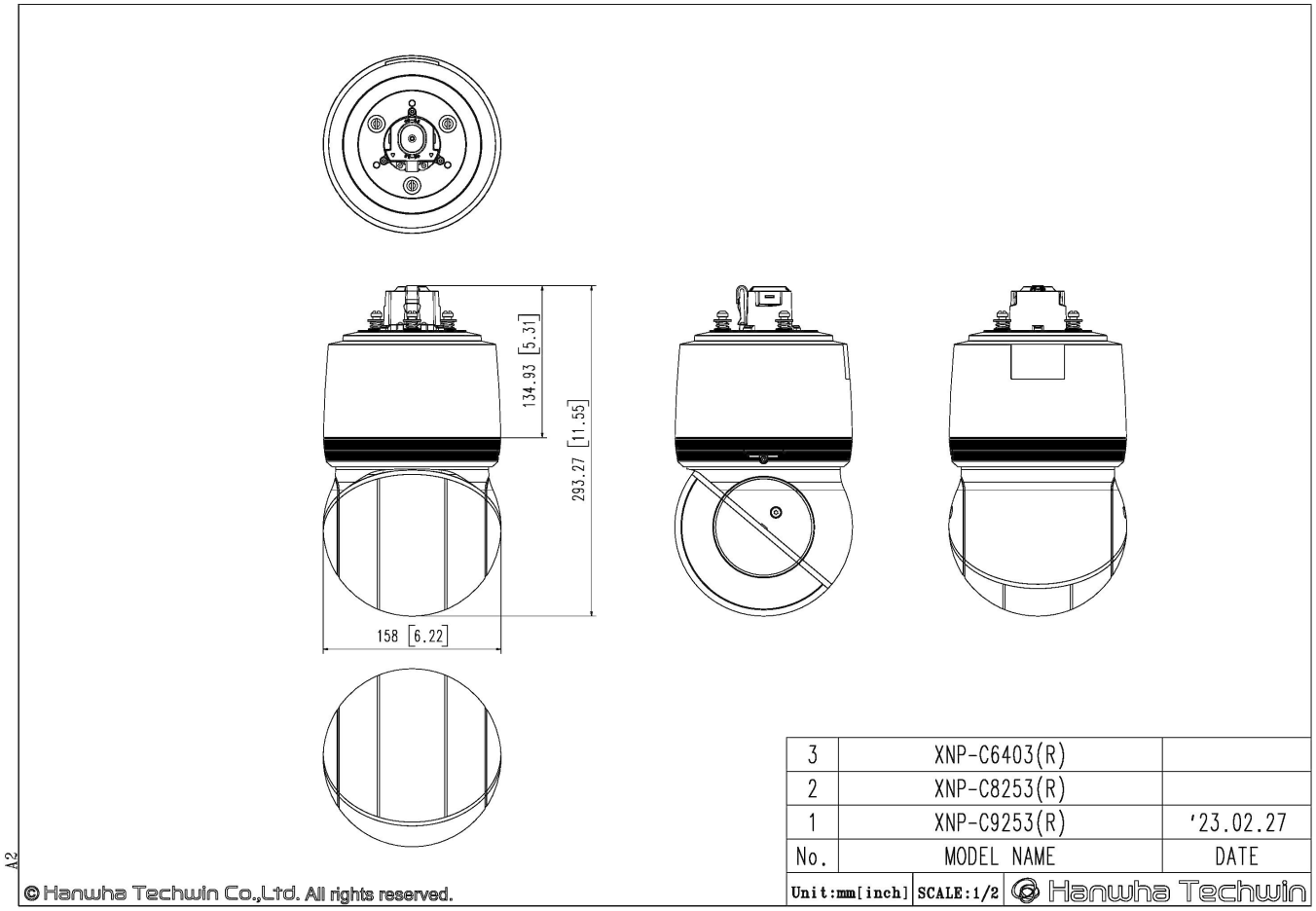

Design and specifications are subject to change without notice. The latest product information / specification can be found at HanwhaVision.com.
Hanwha Vision is formerly known as Hanwha Techwin.

© Hanwha Vision CO., LTD. All rights reserved.